
Atala
2025

CONTENT

E-BIKE

E-MTB	*06*
E-TREKKING	*20*
E-URBAN	*32*

TRADITIONAL BIKE

ROAD	*106*
WELLNESS	*110*
TREKKING	*114*
URBAN	*124*
MTB	*134*
BMX	*145*
JUNIOR	*151*
KIDS	*161*

ATALA E WHISTLE,
DUE MARCHI ED UNA MISSION:
"ONE RIDE AT A TIME"

Progettiamo e produciamo in Italia tutte le nostre eBike e le nostre biciclette in fibra di carbonio. Vengono prodotte in stabilimenti dedicati con macchinari specifici e personale specializzato.
Le nostre biciclette sono conformi alle normative europee di sicurezza e vengono testate sia in laboratorio che sul campo, in particolare dal nostro team professionistico eMTB.
Sviluppa tutti i suoi telai ed i suoi sistemi elettrici con i più importanti fornitori mondiali. Il team Whistle si è dedicato a studi approfonditi del mondo Bike e eBike, analizzando nel minimo dettaglio l'integrazione tra i kit elettrici, la componentistica all'avanguardia ed il design con un solo obiettivo: soddisfare le esigenze di tutti gli utenti.

Per la stagione 2025, propone una gamma sempre più completa; dando particolare rilievo ad un materiale molto leggero e al contempo di grande resistenza, in grado di fornire rigidezza e flessibilità nei punti critici.. il carbonio!

Essere competitivi ed osare sono quindi le parole chiave per Whistle: proporre innovazioni, rompere gli schemi pur nel rispetto della forte tradizione che la contraddistingue.

ATALA E WHISTLE SONO LE BICICLETTE ELETTRICHE PIÙ DISTRIBUITE IN ITALIA

Un grande successo nelle vendite, presso i punti di vendita specializzati, negli ultimi anni ed anche nel 2023, testimoniato dalle ricerche di settore (fonte ricerca di mercato MODUS – ANCMA).

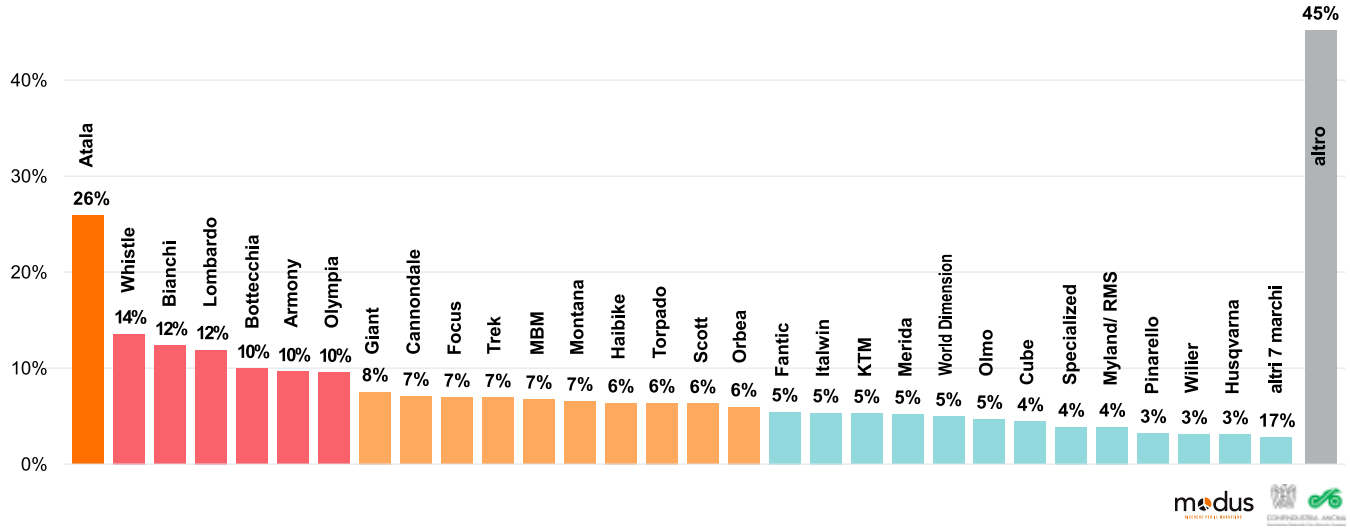

ATALA AND WHISTLE,
TWO BRANDS AND ONE MISSION:
"ONE RIDE AT A TIME"

We design and produce all our eBikes and carbon fiber bicycles in Italy. They are produced in dedicated factories with specific machinery and specialized personnel.
Our bicycles comply with European safety regulations and are tested both in the laboratory and in the field, in particular by our professional eMTB team.
It develops all its frames and electrical systems with the most important global suppliers. The Whistle team has dedicated itself to in-depth studies of the Bike and eBike world, analyzing in great detail the integration between electrical kits, cutting-edge components and design with a single goal: to satisfy the needs of all users.

For the 2025 season, it offers an increasingly complete range; giving particular emphasis to a very light and at the same time highly resistant material, capable of providing rigidity and flexibility in critical points... carbon!

Being competitive and daring are therefore the key words for Whistle: proposing innovations, breaking the mold while respecting the strong tradition that distinguishes it.

ATALA AND WHISTLE ARE THE MOST DISTRIBUTED ELECTRIC BICYCLES IN ITALY

A great success in sales, at specialized stores, in recent years and also in 2023, as demonstrated by sector research (source: MODUS market research – ANCMA).



LE NOSTRE BICI SONO SOTTOPOSTE A TEST IN LABORATORIO E SUL CAMPO DAI NOSTRI ATLETI PER GARANTIRE STANDARD QUALITATIVI E PERFORMACE

OUR BIKES ARE SUBJECTED TO LABORATORY TESTS AND ON THE FIELD BY OUR ATHLETES TO ENSURE QUALITY AND PERFORMANCE STANDARDS



L'azienda produttrice si riserva il diritto di cambiare immagini, colori, specifiche e prezzi senza preavviso.
The manufacturing company takes the right to change pictures, colors, specs and prices without prior notice.

E-MTB

Percorsi sterrati, salite da affrontare con agilità, discese impegnative. Le nostre eMTB Hardtail sono perfette per affrontare ogni tipo di trail.
Ottime anche nei percorsi urbani ed extra urbani per spostamenti quotidiani.
Prodotte con motori Bosch, Yamaha, AM80 e con batterie da 400 Wh fino a 625 Wh.
Sono perfette per ogni tipo di terre e per utilizzo urbano.
Disponibili con ruote da 29", 27.5" e 24".

Dirt roads, climbs to be tackled with agility, challenging descents. Our Hardtail eMTBs are perfect for tackling any type of trail.
Also excellent for urban and extra-urban routes for daily commuting.
Produced with Bosch, Yamaha, AM80 engines and with batteries from 400 Wh up to 625 Wh.
They are perfect for all types of terrain and for urban use.
Available with 29", 27.5" and 24" wheels.



B-CROSS CORWEN

BOSCH | PERFORMANCE CX CRUISE | POWERTUBE 625 | PURION | 29" | 10 S



FRAME	Alu 29", Hydroformed, Integrated battery, Tapered, External routing, Forged interface, QR
FORK	Zoom 860 AMS, Coil, Lockout, 29", Travel 100 mm, QR
HEADSET	FSA No.57BP-1
CRANKSET	Miche 34T
REAR DERAILLEUR	Shimano Deore RD-4120 Shadow Plus, 10s
SHIFTERS LEVERS	Shimano Deore SL-M4100 Rapidfire-Plus, 10s
BRAKES	Shimano BR-MT200, Rotor SM-RT10 180 mm/180 mm
CASSETTE	Shimano CS-M4100, 10s, 11/42
PEDALS	Alu MTB
HUBS	F: Shimano TX505, CL, 32h R: Shimano TX505, CL, HG, 32h
RIMS	Radiale E25, eBike Ready, Tubeless Ready, 622x25c
STEM	Alu, Barbore 31.8 mm
HANDLEBAR	Alu, 720 mm, Barbore 31.8, Rise 25 mm
SEATPOST	Alu 31,6 mm
SADDLE	Selle Royal Sauris
TYRES	Schwalbe Smart Sam, Performance, Addix, 29"x2,25" // Vittoria Barzo
MUDGUARDS	SKS A65R
CHAINCOVER	FSA Bash guard
CARRIERS	Eco2.0 - Imm system
EXTERNAL LIGHTS	F: Herrmans Trelock VEO - 50 lumen R: Axa BlueLine LED Lightguide

MOTOR	Performance CX, 36 V, 250 W
MAX TORQUE	85 Nm
SENSOR TYPE	Torque
BATTERY	Powertube 625 Horizontal, frametype, 3,5 kg
CHARGER TYPE	4 A
CHARGE TIME	Up to 5 hours
MAX ASSISTED SPEED	25 km/h
DISPLAY	Purion
ASSISTANCE	Eco: 60 % Tour: 140 % EMTB: 140 / 340 % Turbo: 340 %

BLACK/BROWN	
46	0115307000
50	0115307010

B-CROSS E-BLADE

BOSCH | PERFORMANCE LINE | POWERTUBE 625 | PURION | 29" | 10 S



FRAME	Alu 29", Hydroformed, Integrated battery, Tapered, External routing, Forged interface, QR
FORK	Zoom 860 AMS, Coil, Lockout, 29", Travel 100 mm, QR
HEADSET	Acros universal, 1,5", Internal routing
CRANKSET	Miche 34T
REAR DERAILLEUR	Shimano Deore RD-4120 Shadow Plus, 10s
SHIFTERS LEVERS	Shimano Deore SL-M4100 Rapidfire-Plus, 10s
BRAKES	Shimano BR-MT200, Rotor SM-RT10 180 mm/180 mm
CASSETTE	Shimano CS-M4100, 10s, 11/42
PEDALS	Alu MTB
HUBS	F: Shimano TX505, CL, 32h R: Shimano TX505, CL, HG, 32h
RIMS	Radiale E25, eBike Ready, Tubeless Ready, 622x25c
STEM	Alu, Barbore 31.8 mm
HANDLEBAR	Alu, 720 mm, Barbore 31.8, Rise 25 mm
SEATPOST	Alu 31,6 mm
SADDLE	Selle Royal Sauris
TYRES	Vittoria Barzo 29"x2.25"
CHAINCOVER	Fsa Bash guard

MOTOR	Performance Line, 36V, 250 Wh
MAX TORQUE	65 Nm
SENSOR TYPE	Torque
BATTERY	Powertube 625 Horizontal, frametype, 3,5 kg
CHARGER TYPE	2 A
CHARGE TIME	Up to 9 hours
MAX ASSISTED SPEED	25 km/h
DISPLAY	Purion
ASSISTANCE	Eco: 55 % Tour: 120 % Sport: 200 % Turbo: 300 %

LIGHT BLUE	
46	0115328500
50	0115328510

B-CROSS A4.4 MAN

BOSCH | PERFORMANCE LINE | POWERTUBE 625 | PURION | 29" | 9 S



FRAME	Alu 29", Hydroformed, Integrated battery, Tapered, External routing, Forged interface, QR
FORK	Zoom 860 AMS, Coil, Lockout, 29", Travel 100 mm, QR
HEADSET	FSA No.57BP-1
CRANKSET	Miche 34T
REAR DERAILLEUR	Sram Rear Derailleur, X5 9s
SHIFTERS LEVERS	Sram Shifter Lever X5 Multiple click, 9s
BRAKES	Shimano BR-MT200, Rotor SM-RT10 180 mm/180 mm
CASSETTE	Sram Cassette PG-920, 9s, 11/34
PEDALS	Alu MTB
HUBS	F: Shimano TX505, CL, 32h R: Shimano TX505, CL, HG, 32h
RIMS	Radiale E25, eBike Ready, Tubeless Ready, 622x25c
STEM	Alu, Barbore 31.8 mm
HANDLEBAR	Alu, 720 mm, Barbore 31.8, Rise 25 mm
SEATPOST	Alu 31,6 mm
SADDLE	Selle Royal Sauris
TYRES	Vittoria Barzo 29"x2.10"
CHAINCOVER	Fsa Bash guard

MOTOR	Performance Line, 36V, 250 Wh
MAX TORQUE	65 Nm
SENSOR TYPE	Torque
BATTERY	Powertube 625 Horizontal, frametype, 3,5 kg
CHARGER TYPE	2 A
CHARGE TIME	Up to 9 hours
MAX ASSISTED SPEED	25 km/h
DISPLAY	Purion
ASSISTANCE	Eco: 55 % Tour: 120 % Sport: 200 % Turbo: 300 %

	BLUE
Man 50	0115307260

B-CROSS A4.4 LADY

BOSCH | PERFORMANCE LINE | POWERTUBE 625 | PURION | 29" | 9 S



FRAME	Alu 29", Hydroformed, Integrated battery, Tapered, External routing, Forged interface, QR
FORK	Zoom 860 AMS, Coil, Lockout, 29", Travel 100 mm, QR
HEADSET	FSA No.57BP-1
CRANKSET	Miche 34T
REAR DERAILLEUR	Sram Rear Derailleur, X5 9s
SHIFTERS LEVERS	Sram Shifter Lever X5 Multiple click, 9s
BRAKES	Shimano BR-MT200, Rotor SM-RT10 180 mm/180 mm
CASSETTE	Sram Cassette PG-920, 9s, 11/34
PEDALS	Alu MTB
HUBS	F: Shimano TX505, CL, 32h R: Shimano TX505, CL, HG, 32h
RIMS	Radiale E25, eBike Ready, Tubeless Ready, 622x25c
STEM	Alu, Barbore 31.8 mm
HANDLEBAR	Alu, 720 mm, Barbore 31.8, Rise 25 mm
SEATPOST	Alu 31,6 mm
SADDLE	Selle Royal Sauris
TYRES	Vittoria Barzo 29"x2.10"
CHAINCOVER	Fsa Bash guard

MOTOR	Performance Line, 36V, 250 Wh
MAX TORQUE	65 Nm
SENSOR TYPE	Torque
BATTERY	Powertube 625 Horizontal, frametype, 3,5 kg
CHARGER TYPE	2 A
CHARGE TIME	Up to 9 hours
MAX ASSISTED SPEED	25 km/h
DISPLAY	Purion
ASSISTANCE	Eco: 55 % Tour: 120 % Sport: 200 % Turbo: 300 %

	BLUE
Lady 40	0115307200
Lady 46	0115307210

B-CROSS A6.2 X5

BOSCH | PERFORMANCE CX CRUISE | POWERTUBE 500 | PURION | 29" | 9 S



FRAME	Alu 29", Hydroformed, internal powerpack, Tapered, custom tubing, Internal routing, Forged interface
FORK	Zoom 860 AMS, 100 mm, Coil
HEADSET	Acros AZF-576, 1,5", Internal routing
CRANKSET	Miranda, 34T
REAR DERAILLEUR	Sram X5, 9s
SHIFTERS LEVERS	Sram X5, Multiple Click Trigger, 9s
BRAKES	Shimano BR-MT200, Rotor SM-RT10 180 mm/180 mm
CASSETTE	Sram PG-920, 9s, 11/34
PEDALS	Alu MTB
HUBS	F: Shimano TX505, CL, 32h R: Shimano TX505, CL, HG, 32h
RIMS	Radiale E25, eBike Ready, Tubeless Ready, 622x25c
STEM	Satori Viper0, 31,8 mm, Internal routing
HANDLEBAR	Alu Low Rise, 720 mm
SEATPOST	Alu 30,9 mm
SADDLE	Selle Royal Sauris
TYRES	Schwalbe Smart Sam, Performance, Addix, 29"x2,35"

MOTOR	Performance CX 36 V, 250 W
MAX TORQUE	85 Nm
SENSOR TYPE	Torque
BATTERY	Powerpack 500, frametype, weight 2,6 kg
CHARGER TYPE	2 A
CHARGE TIME	Up to 7 hours
MAX ASSISTED SPEED	25 km/h
DISPLAY	Purion
ASSISTANCE	Eco: 60 % Tour: 140 % EMTB: 140 / 340 % Turbo: 340 %

ANTHRACITE/BLACK	
40	0115307102
46	0115307112
50	0115307122

B-CROSS A4.2

BOSCH | PERFORMANCE CRUISE | POWERTUBE 400 | PURION | 29" | 10 S



FRAME	Alu 29", Hydroformed, internal powerpack, Tapered, custom tubing, Internal routing, Forged interface
FORK	Suntour XCM, 100 mm, Coil, Lockout
HEADSET	Acros AZF-576, 1,5", Internal routing
CRANKSET	Miranda, 34T
REAR DERAILLEUR	Sram X5, 9s /LT, RD-V54009-L2, 9s
SHIFTERS LEVERS	Sram X5, Multiple Click Trigger, 9s / LT, RD-V54009-9W, 9s
BRAKES	Shimano BR-MT200, Rotor SM-RT10 180 mm/180 mm / Clarks M2, Rotor 180mm/180mm
CASSETTE	Sram PG-920, 9s, 11/34 / LT, CS-A5, 9s, 11-34T
PEDALS	Alu MTB
HUBS	F: Shimano TX505, CL, 32h R: Shimano TX505, CL, HG, 32h
RIMS	Radiale E25, eBike Ready, Tubeless Ready, 622x25c
STEM	Satori Viper0, 31,8 mm, Internal routing
HANDLEBAR	Alu Low Rise, 720 mm
SEATPOST	Alu 30,9 mm
SADDLE	Selle Royal Sauris
TYRES	Schwalbe Tough Tom, 29"x2,35"

MOTOR	Performance 36 V, 250 W
MAX TORQUE	65 Nm
SENSOR TYPE	Torque
BATTERY	Powerpack 400 Horizontal, frametype, 2,5 kg
CHARGER TYPE	2 A
CHARGE TIME	Up to 6,5 hours
MAX ASSISTED SPEED	25 km/h
DISPLAY	Purion
ASSISTANCE	Eco: 55 % Tour: 120 % Sport: 200 % Turbo: 300 %

BLACK/ORANGE VERSION LT	
40	0115307307
46	0115307317
BLACK/ORANGE VERSION X5	
40	0115307303
46	0115307313

B-CROSS A5.2 S

AM-80 | ENERGYTUBE 540 | AM LCD FULL-COLOUR | 29" | 9 S



FRAME	Alu 29", hydroformed, integrated battery, tapered, Internal routing, Forged interface
FORK	Zoom 860 AMS, 100 mm, Coil, Tapered, Lockout
HEADSET	Acros AZF-575, 1,5", Internal routing
CRANKSET	FSA, 34T, Megatooth
REAR DERAILLEUR	Sram SX Eagle
SHIFTERS LEVERS	Sram SX Eagle Single Click Trigger, 12s
BRAKES	Shimano BR-MT200, Rotor SM-RT10 180 mm/180 mm
CASSETTE	Sanrace CSMZ902, 12s, 11/50
PEDALS	Alu MTB
HUBS	F: Shimano TX505, CL, 32h R: Shimano TX505, CL, HG, 32h
RIMS	Radiale E25, eBike Ready, Tubeless Ready, 622x25c
STEM	Satori Viper0, 31,8 mm, Internal routing
HANDLEBAR	Alu Low Rise, 720 mm
SEATPOST	Alu 30,4 mm
SADDLE	Selle Royal Sauris
TYRES	Vittoria Barzo, 29"x2,35
CHAINCOVER	Fsa Bash guard

MOTOR	AM-80 36 V, 250 W
MAX TORQUE	80 Nm
SENSOR TYPE	Torque
BATTERY	EnergyTube 540, frametype, weight 2.9 kg
CHARGER TYPE	2 A
CHARGE TIME	Up to 7 hours
MAX ASSISTED SPEED	25 km/h
DISPLAY	AM LCD full-colour
ASSISTANCE	Mode 1: 50% Mode 2: 100% Mode 3: 200% Mode 4: 300% Mode 5: 400%

ANTHRACITE/BLACK	
46	0115296412
50	0115296422

B-CROSS A5.4

AM-80 | ENERGYTUBE 540 | AM LCD FULL-COLOUR | 29" | 12 S



FRAME	Alu 29", Hydroformed, Integrated battery, Tapered, External routing, Forged interface, QR
FORK	Suntour XCR32, Coil, 29", Travel 100, 1.5 Tapered, QR // Zoom 860 AMS, Travel 100
HEADSET	Acros for Viper, 1.5", Internal routing
CRANKSET	FSA, 34T, Megatooth
REAR DERAILLEUR	Sram SX Eagle
SHIFTERS LEVERS	Sram SX Eagle Single Click Trigger, 12s
BRAKES	Clarks M4, Rotor SM-RT10 180 mm/180 mm
CASSETTE	Sram PG1210 Eagle 12s, 11/50
PEDALS	Alu MTB
HUBS	F: Shimano TX505, CL, 32h R: Shimano TX505, CL, HG, 32h
RIMS	Radiale E25, eBike Ready, Tubeless Ready, 622x25c
STEM	Satori Viper 0, Barbore 31.8 mm, Internal routing
HANDLEBAR	Alu, 720 mm, Barbore 31.8, Rise 25 mm
SEATPOST	Alu 30,4 mm
SADDLE	Selle Royal Sauris
TYRES	Schwalbe Smart Sam, Performance, Addix, 29"x2,35" // Vittoria Barzo
CARRIERS	FSA Bash guard
CHAINCOVER	Fsa Bash guard

MOTOR	AM-80 36 V, 250 W
MAX TORQUE	80 Nm
SENSOR TYPE	Torque
BATTERY	EnergyTube 540, frametype, weight 2,9 kg
CHARGER TYPE	2 A
CHARGE TIME	Up to 7 hours
MAX ASSISTED SPEED	25 km/h
DISPLAY	AM LCD full-colour
ASSISTANCE	Mode 1: 50% Mode 2: 100% Mode 3: 200% Mode 4: 300% Mode 5: 400%

ANTHRACITE/BLACK	
42	0115296400
46	0115296410
50	0115296420

B-CROSS A3.4

AM30 | AM-80 | ENERGYTUBE 540 | AM LCD | 29" | 9 S



FRAME	Alu 29", Hydroformed, Integrated battery, Tapered, External routing, Forged interface, QR
FORK	Zoom 860 AMS, 100 mm, Steerer, Coil
HEADSET	Acros for Viper, 1.5", Internal routing
CRANKSET	Miranda, 34T
REAR DERAILLEUR	Sram Rear Derailleur, X5 9s /LT, RD-V5010-LX, 10s
SHIFTERS LEVERS	Sram Shifter Lever X5 Multiple click, 9s / LT, SL-V5010-10, 10s
BRAKES	Clarks M2, Rotor SM-RT10 180mm/180mm
CASSETTE	Sram Cassette PG-920, 9s, 11/34 / LT, CS-A7, 10s, 11-46T
PEDALS	Alu MTB
HUBS	F: Shimano TX505, CL, 32h R: Shimano TX505, CL, HG, 32h
RIMS	Radiale E25, eBike Ready, Tubeless Ready, 622x25c
STEM	Satori Viper 0, Barbore 31.8 mm, Internal routing
HANDLEBAR	Alu, 720 mm, Barbore 31.8, Rise 25 mm
SEATPOST	Alu 30,4 mm
SADDLE	Selle Royal Mach
TYRES	Schwalbe Rapid Rob, 29"x2.25" // Vittoria Barzo
CARRIERS	FSA Bash guard
CHAINCOVER	Fsa Bash guard

MOTOR	AM-80 36 V, 250 W
MAX TORQUE	80 Nm
SENSOR TYPE	Torque
BATTERY	EnergyTube 540, frametype, weight 2,9 kg
CHARGER TYPE	2 A
CHARGE TIME	Up to 7 hours
MAX ASSISTED SPEED	25 km/h
DISPLAY	AM LCD full-colour
ASSISTANCE	Mode 1: 50% Mode 2: 100% Mode 3: 200% Mode 4: 300% Mode 5: 400%

ANTHRACITE/BLACK VERSION LT	
42	0115296455
46	0115296465
50	0115296475
ANTHRACITE/BLACK VERSION X5	
42	0115296450
46	0115296460
50	0115296470

E-MTB

Y-CROSS A4.4

YAMAHA | PS-X1X3 ST | DOWN TUBE 400 | DISPLAY A | 27,5" | 10 S



FRAME	Alu 29" - 27.5", Hydroformed,Downtube battery, Tapered, External Routing, Forged Interface, QR
FORK	Zoom 860 AMS, 100 mm, Straight, Coil
HEADSET	FSA No.57BP-1
CRANKSET	Miche 34T
REAR DERAILLEUR	LT, RD-V5010-LX, 10s
SHIFTERS LEVERS	LT, SL-V5010-10, 10s
BRAKES	Clarks M2, Rotor 180mm/180mm
CASSETTE	LT, CS-A7, 10s, 11-46T
PEDALS	Alu MTB
HUBS	F: Shimano TX505, CL, 32h R: Shimano TX505, CL, HG, 32h
RIMS	Radiale E25, eBike Ready, Tubeless Ready, 622x25c
STEM	Alu, Bar bore 31.8 mm
HANDLEBAR	Alu, 720 mm, 31.8 mm, Rise 25 mm
SEATPOST	Alu 31.6 mm
SADDLE	Selle Royal Sauris
TYRES	Schwalbe Smart Sam, Performance,, 27,5"x2.35"
CHAINCOVER	FSA Bash guard

MOTOR	Pwseries ST, 250 W, 36 V
MAX TORQUE	70 Nm
SENSOR TYPE	Torque
BATTERY	External on downtube, DT400
CHARGER TYPE	25 km/h
CHARGE TIME	Up to 3.5 hours
MAX ASSISTED SPEED	25 km/h
DISPLAY	Display A
ASSISTANCE	+Eco: 50% Eco: 100% Standard: 190% High-Performance: 280%

BLACK	
42	0115307600
46	0115307610
50	0115307620

B-CROSS SUV

AM30 | AM-80 | ENERGYTUBE 500 | AM LCD FULL-COLOUR | 29" | 12 S



FRAME	Alu 29", Hydroformed, Integrated battery, Tapered, External routing, Forged interface, QR
FORK	Zoom 860 AMS, Coil, Lockout, 29", Travel 100 mm, QR
HEADSET	Acros for Viper, 1.5", Internal routing
CRANKSET	FSA, 34T, Megatooth
REAR DERAILLEUR	Sram SX Eagle, 12s
SHIFTERS LEVERS	Sram SX Eagle, 12s Single Click Trigger, 12s
BRAKES	Shimano BR-MT200, Rotor SM-RT10 180 mm/180 mm
CASSETTE	Sram PG1210 Eagle 12s, 11/50
PEDALS	Alu MTB
HUBS	F: Shimano TX505, CL, 32h R: Shimano TX505, CL, HG, 32h
RIMS	Radiale E25, eBike Ready, Tubeless Ready, 622x25c
STEM	Satori Viper 0, Barbore 31.8 mm, Internal routing
HANDLEBAR	Alu, 720 mm, Barbore 31.8, Rise 25 mm
SEATPOST	Alu 30,4 mm
SADDLE	Selle Royal Sauris
TYRES	Schwalbe Smart Sam, Performance, Addix, 29"x2.35"
MUDGUARDS	SKS A65R
CHAINCOVER	FSA Bash guard
CARRIERS	Alu, without brackets
EXTERNAL LIGHTS	Front light on handlebar with battery Rear light on rear carrier with battery

MOTOR	AM-80 36 V, 250 W
MAX TORQUE	80 Nm
SENSOR TYPE	Torque
BATTERY	EnergyTube 500, frametype, weight 2,9 kg
CHARGER TYPE	2 A
CHARGE TIME	Up to 7 hours
MAX ASSISTED SPEED	25 km/h
DISPLAY	AM LCD full-colour
ASSISTANCE	Mode 1: 50% Mode 2: 100% Mode 3: 200% Mode 4: 300% Mode 5: 400%

ANTHRACITE/BLACK	
42	0115296405
46	0115296415
50	0115296425

DOODLE

AM80 easy | EASY | 504WH | A19 DIGIT LED | 24" | 9 S



FRAME	Alu. Hydroformed 24", integrated battery, internal cables
FORK	Suntour XCT JR 24", alu with alu crown, 80mm
HEADSET	FSA integrated 1"1/8
CRANKSET	Alu 152mm, FSA 36T
REAR DERAILLEUR	Shimano Cues RD-U3020
SHIFTERS LEVERS	Shimano Cues SL-U4000, 9s
BRAKES	Shimano BR-MT200 hydraulic disc, Rotor 160 mm CL
CASSETTE	Shimano Cues CS-LG300 9s 11-36T
PEDALS	Alu MTB
HUBS	Shimano QC300 32h, CL, quick release
RIMS	Radiale E25 24", double wall, 32h, disc
STEM	Alu over, ahead, 60mm
HANDLEBAR	Alu MTB over, 640mm, rise 25mm
SEATPOST	Alu with clamp, 27,2mm
SADDLE	MTB Junior
TYRES	Schwalbe Smart Sam 24"x2,10"

MOTOR	AM80 Easy UART, 36V, mid motor
POWER	Rated: 250W, Max: 455W
MAX TORQUE	70 Nm
SENSOR TYPE	Torque
BATTERY	Phylion Li-Ion 36V, 504Wh, on frame, with Smart BMS UART, 2,70Kg
CHARGER TYPE	2A Europlug
CHARGE TIME	100%: 7h30m / 80%: 5h36m
MAX ASSISTED SPEED	25 km/h
DISPLAY	A19 Digit LED UART
ASSISTANCE	5 levels of Support

OTHER FUNCTIONS
Walking assistance, External light control, Speed information, Battery %

NOTE	bell, keyring

	RED
35	0115327500


Atala

E-TREKKING

Telai con geometrie sviluppate per il massimo comfort ed abbinati a sistemi elettrici che garantiscono migliori prestazioni ed autonomia.
Dettagli come parafanghi, luci, portapacchi e gomme disegnati per una semplicità d'uso e durata nel tempo.

Frames with geometries developed for maximum comfort and combined with electrical systems that guarantee better performance and autonomy.
Details such as mudguards, lights, luggage racks and tires designed for ease of use and durability over time.



L'azienda produttrice si riserva il diritto di cambiare immagini, colori, specifiche e prezzi senza preavviso.
The manufacturing company takes the right to change pictures, colors, specs and prices without prior notice.

B-TOUR A8.4 MAN

BOSCH | PERFORMANCE LINE | POWERTUBE 625 | PURION | 28" | 10 S



FRAME	Alu, 700C, Hydroformed, Integrated battery, Tapered, Internal routing, QR
FORK	Suntour NVX30, Coil, Lockout, 29", Travel 63 mm, QR // Zoom 187D - 188D
HEADSET	Acros for Phyotn, 1,5", Internal routing
CRANKSET	FSA 38T
REAR DERAILLEUR	Shimano Deore RD-M5120, Shadow Plus, 10s
SHIFTERS LEVERS	Shimano Deore SL-M4100 Rapidfire-Plus, 10s
BRAKES	Shimano BR-MT200, Rotor SM-RT10 180 mm/180 mm
CASSETTE	Shimano CS-M4100, 10s, 11/46
PEDALS	Alu TKK
HUBS	F: Shimano TX505, CL, 32h R: Shimano TX505, CL, HG, 32h
RIMS	Radiale E25, eBike Ready, Tubeless Ready, 622x25c
STEM	Satori Python, Barbore 31.8 mm, Adjustable, Internal routing
HANDLEBAR	Satori Noirette City, 630 mm, Barbore 31.8 mm, Rise 21 mm, Back sweep 30°
SEATPOST	Satori Harmony, Suspended, 31.6 mm
SADDLE	Atala Memory Foam Trekking
TYRES	Schwalbe Energizer Active Plus, Greenguard, TwinSkin, 700x55 // Vittoria Randoneur
MUDGUARDS	SKS A65
CHAINCOVER	SKS Chainbow
EXTERNAL LIGHTS	F: Herrmans MR GO - 120 lumen R: Axa BlueLine LED Lightguide

MOTOR	Performance Line, 36V, 250 Wh
MAX TORQUE	65 Nm
SENSOR TYPE	Torque
BATTERY	PowerTube 625 Horizontal, type, weight 3,5 kg
CHARGER TYPE	2A
CHARGE TIME	Up to 9 hours
MAX ASSISTED SPEED	25 km/h
DISPLAY	Purion
ASSISTANCE	Eco: 55 % Tour: 120 % Sport: 200 % Turbo: 300 %

BLACK/ANTHRACITE	
50	0115307700
53	0115307710
59	0115307720

B-TOUR A8.4 LADY

BOSCH | PERFORMANCE LINE | POWERTUBE 625 | PURION | 28" | 10 S



FRAME	Alu, 700C, Hydroformed, Integrated battery, Tapered, Internal routing, QR
FORK	Suntour NVX30, Coil, Lockout, 29", Travel 63 mm, QR // Zoom 187D - 188D
HEADSET	Acros for Phyotn, 1,5", Internal routing
CRANKSET	FSA 38T
REAR DERAILLEUR	Shimano Deore RD-M5120, Shadow Plus, 10s
SHIFTERS LEVERS	Shimano Deore SL-M4100 Rapidfire-Plus, 10s
BRAKES	Shimano BR-MT200, Rotor SM-RT10 180 mm/180 mm
CASSETTE	Shimano CS-M4100, 10s, 11/46
PEDALS	Alu TKK
HUBS	F: Shimano TX505, CL, 32h R: Shimano TX505, CL, HG, 32h
RIMS	Radiale E25, eBike Ready, Tubeless Ready, 622x25c
STEM	Satori Python, Barbore 31.8 mm, Adjustable, Internal routing
HANDLEBAR	Satori Noirette City, 630 mm, Barbore 31.8 mm, Rise 21 mm, Back sweep 30°
SEATPOST	Satori Harmony, Suspended, 31.6 mm
SADDLE	Atala Memory Foam Trekking
TYRES	Schwalbe Energizer Active Plus, Greenguard, TwinSkin, 700x55 // Vittoria Randoneur
MUDGUARDS	SKS A65
CHAINCOVER	SKS Chainbow
EXTERNAL LIGHTS	F: Herrmans MR GO - 120 lumen R: Axa BlueLine LED Lightguide

MOTOR	Performance Line, 36V, 250 Wh
MAX TORQUE	65 Nm
SENSOR TYPE	Torque
BATTERY	PowerTube 625 Horizontal, type, weight 3,5 kg
CHARGER TYPE	2A
CHARGE TIME	Up to 9 hours
MAX ASSISTED SPEED	25 km/h
DISPLAY	Purion
ASSISTANCE	Eco: 55 % Tour: 120 % Sport: 200 % Turbo: 300 %

	BLUE/ANTHRACITE
45	0115307800
50	0115307810

E-TREKKING

B-TOUR FARAD MAN

BOSCH | PERFORMANCE LINE | POWERTUBE 625 | PURION | 28" | 9 S



FRAME	Alu, 700C, Hydroformed, Integrated battery, Tapered, Internal routing, QR
FORK	Zoom 860S, Coil, 29", Travel 100 mm, QR
HEADSET	Acros for Phyotn, 1,5", Internal routing
CRANKSET	Miranda, 38T
REAR DERAILLEUR	Sram Rear Derailleur, X5 9s
SHIFTERS LEVERS	Sram Shifter Lever X5 Multiple click, 9s
BRAKES	Shimano BR-MT200, Rotor Clarks 180 mm/180 mm
CASSETTE	Sram Cassette PG-920, 9s, 11/34
PEDALS	Alu TKK
HUBS	F: Shimano TX505, CL, 32h R: Shimano TX505, CL, HG, 32h
RIMS	Rodi Viper 28, 622x23
STEM	Satori Python, Barbore 31.8 mm, Adjustable, Internal routing
HANDLEBAR	Satori Noirette City, 630 mm, Barbore 31.8 mm, Rise 21 mm, Back sweep 30°
SEATPOST	Satori Harmony, Suspended, 31.6 mm
SADDLE	Sella Italia,Modelx SuperFlow Comfort
TYRES	Vittoria Barzo, 29"x2.25"
MUDGUARDS	SKS A65R
CHAINCOVER	Herrmand Slyde 38
CARRIERS	Alu, without brackets
EXTERNAL LIGHTS	F: AXA Compact Line 35 R: Axa BlueLine LED Lightguide

MOTOR	Performance Line, 36V, 250 Wh
MAX TORQUE	65 Nm
SENSOR TYPE	Torque
BATTERY	PowerTube 625 Horizontal, type, weight 3,5 kg
CHARGER TYPE	2A
CHARGE TIME	Up to 9 hours
MAX ASSISTED SPEED	25 km/h
DISPLAY	Purion
ASSISTANCE	Eco: 55 % Tour: 120 % Sport: 200 % Turbo: 300 %

ANTHRACITE	
50	0115328450
53	0115328460

E-TREKKING

B-TOUR FARAD LADY

BOSCH | PERFORMANCE LINE | POWERTUBE 625 | PURION | 28" | 9 S



FRAME	Alu, 700C, Hydroformed, Integrated battery, Tapered, Internal routing, QR
FORK	Zoom 860S, Coil, 29", Travel 100 mm, QR
HEADSET	Acros for Phyotn, 1,5", Internal routing
CRANKSET	Miranda, 38T
REAR DERAILLEUR	Sram Rear Derailleur, X5 9s
SHIFTERS LEVERS	Sram Shifter Lever X5 Multiple click, 9s
BRAKES	Shimano BR-MT200, Rotor Clarks 180 mm/180 mm
CASSETTE	Sram Cassette PG-920, 9s, 11/34
PEDALS	Alu TKK
HUBS	F: Shimano TX505, CL, 32h R: Shimano TX505, CL, HG, 32h
RIMS	Rodi Viper 28, 622x23
STEM	Satori Python, Barbore 31.8 mm, Adjustable, Internal routing
HANDLEBAR	Satori Noirette City, 630 mm, Barbore 31.8 mm, Rise 21 mm, Back sweep 30°
SEATPOST	Satori Harmony, Suspended, 31.6 mm
SADDLE	Sella Italia,Modelx SuperFlow Comfort
TYRES	Vittoria Barzo, 29"x2.25"
MUDGUARDS	SKS A65R
CHAINCOVER	Herrmand Slyde 38
CARRIERS	Alu, without brackets
EXTERNAL LIGHTS	F: AXA Compact Line 35 R: Axa BlueLine LED Lightguide

MOTOR	Performance Line, 36V, 250 Wh
MAX TORQUE	65 Nm
SENSOR TYPE	Torque
BATTERY	PowerTube 625 Horizontal, type, weight 3,5 kg
CHARGER TYPE	2A
CHARGE TIME	Up to 9 hours
MAX ASSISTED SPEED	25 km/h
DISPLAY	Purion
ASSISTANCE	Eco: 55 % Tour: 120 % Sport: 200 % Turbo: 300 %

	RED
50	0115328410

B-TOUR 7.4 MAN

BOSCH | PERFORMANCE LINE | POWERTUBE 500 | PURION | 28" | 9 S



FRAME	Alu, 700C, Hydroformed, Integrated battery, Tapered, Internal routing, QR
FORK	Suntour NEX-E25, Coil, Lockout, 28", Travel 63 mm, QR // Zoom 187D - 188D
HEADSET	Acros for Phyotn, 1,5", Internal routing
CRANKSET	FSA, 38T
REAR DERAILLEUR	Sram Rear Derailleur, X5 9s / LT, RD-V54009-L2, 9s
SHIFTERS LEVERS	Sram Shifter Lever X5 Multiple click, 9s / LT, RD-V54009-9W, 9s
BRAKES	Shimano BR-MT200, Rotor SM-RT10 180 mm/180 mm / Clarks M2, Rotor 180mm/180mm
CASSETTE	Sram Cassette PG-920, 9s, 11/34 / LT, CS-A5, 9s, 11-34T
PEDALS	Alu TKK
HUBS	F: Shimano TX505, CL, 32h R: Shimano TX505, CL, HG, 32h
RIMS	Radiale E25, eBike Ready, Tubeless Ready, 622x25c
STEM	Satori Python, Barbore 31.8 mm, Adjustable, Internal routing
HANDLEBAR	Satori Noirette City, 630 mm, Barbore 31.8 mm, Rise 21 mm, Back sweep 30°
SEATPOST	Satori Harmony, Suspended, 31.6 mm
SADDLE	Atala Memory Foam Trekking
TYRES	Schwalbe Energizer Active Plus, Punctureguard, TwinSkin, 700x50C // Victoria Randonneur
MUDGUARDS	SKS A60S
CHAINCOVER	SKS Chainbow
CARRIERS	Racktime Eco2.0 - Imm system
EXTERNAL LIGHTS	F: Herrmans MR GO - 120 lumen R: Axa BlueLine LED Lightguide

MOTOR	Performance Line 36 V, 250 W
MAX TORQUE	65 Nm
SENSOR TYPE	Torque
BATTERY	PowerTube 500 Horizontal, weight 2.9 kg
CHARGER TYPE	2A
CHARGE TIME	Up to 7,5 hours
MAX ASSISTED SPEED	25 km/h
DISPLAY	Purion
ASSISTANCE	Eco: 55 % Tour: 120 % Sport: 200 % Turbo: 300 %

GREY/BLUE VERSION LT	
53	0115296914
GREY/BLUE VERSION X5	
50	0115296906

B-TOUR 7.4 LADY

BOSCH | PERFORMANCE LINE | POWERTUBE 500 | PURION | 28" | 9 S



FRAME	Alu, 700C, Hydroformed, Integrated battery, Tapered, Internal routing, QR
FORK	Suntour NEX-E25, Coil, Lockout, 28", Travel 63 mm, QR // Zoom 187D - 188D
HEADSET	Acros for Phyotn, 1,5", Internal routing
CRANKSET	FSA, 38T
REAR DERAILLEUR	Sram Rear Derailleur, X5 9s / LT, RD-V54009-L2, 9s
SHIFTERS LEVERS	Sram Shifter Lever X5 Multiple click, 9s / LT, RD-V54009-9W, 9s
BRAKES	Shimano BR-MT200, Rotor SM-RT10 180 mm/180 mm / Clarks M2, Rotor 180mm/180mm
CASSETTE	Sram Cassette PG-920, 9s, 11/34 / LT, CS-A5, 9s, 11-34T
PEDALS	Alu TKK
HUBS	F: Shimano TX505, CL, 32h R: Shimano TX505, CL, HG, 32h
RIMS	Radiale E25, eBike Ready, Tubeless Ready, 622x25c
STEM	Satori Python, Barbore 31.8 mm, Adjustable, Internal routing
HANDLEBAR	Satori Noirette City, 630 mm, Barbore 31.8 mm, Rise 21 mm, Back sweep 30°
SEATPOST	Satori Harmony, Suspended, 31.6 mm
SADDLE	Atala Memory Foam Trekking
TYRES	Schwalbe Energizer Active Plus, Punctureguard, TwinSkin, 700x50C // Victoria Randonneur
MUDGUARDS	SKS A60S
CHAINCOVER	SKS Chainbow
CARRIERS	Racktime Eco2.0 - Imm system
EXTERNAL LIGHTS	F: Herrmans MR GO - 120 lumen R: Axa BlueLine LED Lightguide

MOTOR	Performance Line 36 V, 250 W
MAX TORQUE	65 Nm
SENSOR TYPE	Torque
BATTERY	PowerTube 500 Horizontal, weight 2.9 kg
CHARGER TYPE	2A
CHARGE TIME	Up to 7,5 hours
MAX ASSISTED SPEED	25 km/h
DISPLAY	Purion
ASSISTANCE	Eco: 55 % Tour: 120 % Sport: 200 % Turbo: 300 %

ANTHRACITE/GREEN VERSION LT	
53	0115297024
ANTHRACITE/GREEN VERSION X5	
45	0115297006

E-TREKKING

B-TOUR A6.4 MAN

BOSCH | ACTIVE PLUS | POWERPACK 500 | PURION | 28" | 9 S



FRAME	Alu, 700C, Hydroformed, Internal PowerPack battery, Tapered, Internal routing, QR
FORK	Zoom 187D AMS, Coil, 28", Travel 65 mm, QR
HEADSET	Acros for Phyotn, 1,5", Internal routing
CRANKSET	Miranda, 38T
REAR DERAILLEUR	Sram Rear Derailleur, X5 9s
SHIFTERS LEVERS	Sram Shifter Lever X5 Multiple click, 9s
BRAKES	Shimano BR-MT200, Rotor SM-RT10 180 mm/180 mm
CASSETTE	Sram Cassette PG-920, 9s, 11/34
PEDALS	Alu TKK
HUBS	F: Shimano TX505, CL, 32h R: Shimano TX505, CL, HG, 32h
RIMS	Radiale E25, eBike Ready, Tubeless Ready, 622x25c
STEM	Satori Python, Barbore 31.8 mm, Adjustable, Internal routing
HANDLEBAR	Satori Noirette City, 630 mm, Barbore 31.8 mm, Rise 21 mm, Back sweep 30°
SEATPOST	Satori Harmony, Suspended, 30.9 mm
SADDLE	Atala Memory Foam Trekking
TYRES	Schwalbe Energizer Active Plus, Punctureguard, TwinSkin, 700x50C // Victoria Randonneur
MUDGUARDS	SKS A60S
CHAINCOVER	SKS Chainbow
CARRIERS	Alu, without brackets
EXTERNAL LIGHTS	F: Herrmans MR GO - 120 lumen R: Axa BlueLine LED Lightguide

MOTOR	Active Plus, 36 V, 250 W
MAX TORQUE	50 Nm
SENSOR TYPE	Torque
BATTERY	PowerPack 500, weight 2,6 kg
CHARGER TYPE	2 A
CHARGE TIME	Up to 7,5 hours
MAX ASSISTED SPEED	25 km/h
DISPLAY	Purion
ASSISTANCE	Eco: 55 % Tour: 120 % Sport: 200 % Turbo: 300 %

	GRAY
50	0115307906

E-TREKKING

B-TOUR A6.4 LADY

BOSCH | ACTIVE PLUS | POWERPACK 500 | PURION | 28" | 9 S



FRAME	Alu, 700C, Hydroformed, Internal PowerPack battery, Tapered, Internal routing, QR
FORK	Zoom 187D AMS, Coil, 28", Travel 65 mm, QR
HEADSET	Acros for Phyotn, 1,5", Internal routing
CRANKSET	Miranda, 38T
REAR DERAILLEUR	Sram Rear Derailleur, X5 9s
SHIFTERS LEVERS	Sram Shifter Lever X5 Multiple click, 9s
BRAKES	Shimano BR-MT200, Rotor SM-RT10 180 mm/180 mm
CASSETTE	Sram Cassette PG-920, 9s, 11/34
PEDALS	Alu TKK
HUBS	F: Shimano TX505, CL, 32h R: Shimano TX505, CL, HG, 32h
RIMS	Radiale E25, eBike Ready, Tubeless Ready, 622x25c
STEM	Satori Python, Barbore 31.8 mm, Adjustable, Internal routing
HANDLEBAR	Satori Noirette City, 630 mm, Barbore 31.8 mm, Rise 21 mm, Back sweep 30°
SEATPOST	Satori Harmony, Suspended, 30.9 mm
SADDLE	Atala Memory Foam Trekking
TYRES	Schwalbe Energizer Active Plus, Punctureguard, TwinSkin, 700x50C // Victoria Randonneur
MUDGUARDS	SKS A60S
CHAINCOVER	SKS Chainbow
CARRIERS	Alu, without brackets
EXTERNAL LIGHTS	F: Herrmans MR GO - 120 lumen R: Axa BlueLine LED Lightguide

MOTOR	Active Plus, 36 V, 250 W
MAX TORQUE	50 Nm
SENSOR TYPE	Torque
BATTERY	PowerPack 500, weight 2,6 kg
CHARGER TYPE	2 A
CHARGE TIME	Up to 7,5 hours
MAX ASSISTED SPEED	25 km/h
DISPLAY	Purion
ASSISTANCE	Eco: 55 % Tour: 120 % Sport: 200 % Turbo: 300 %

BROWN/ANTHRACITE	
45	0115308006

B-TOUR A5.4 X5 MAN

BOSCH | ACTIVE PLUS | POWERPACK 400 | PURION | 28" | 9 S



FRAME	Alu, 700C, Hydroformed, Internal PowerPack battery, Tapered, Internal routing, QR
FORK	Suntour NEX, Coil, Travel 63 mm, QR // Zoom 187D - 188D
HEADSET	Acros for Phyotn, 1,5", Internal routing
CRANKSET	Miranda, 38T
REAR DERAILLEUR	Sram Rear Derailleur, X5 9s
SHIFTERS LEVERS	Sram Shifter Lever X5 Multiple click, 9s
BRAKES	Shimano BR-MT200, Rotor SM-RT10 180 mm/180 mm
CASSETTE	Sram Cassette PG-920, 9s, 11/34
PEDALS	Alu TKK
HUBS	F: Shimano TX505, CL, 32h R: Shimano TX505, CL, HG, 32h
RIMS	Radiale E25, eBike Ready, Tubeless Ready, 622x25c
STEM	Satori Python, Barbore 31.8 mm, Adjustable, Internal routing
HANDLEBAR	Satori Noirette City, 630 mm, Barbore 31.8 mm, Rise 21 mm, Back sweep 30°
SEATPOST	Satori Harmony, Suspended, 30.9 mm
SADDLE	Atala Memory Foam Trekking
TYRES	Schwalbe Energizer Active Plus, Punctureguard, TwinSkin, 700x50C // Victoria Randonneur
MUDGUARDS	SKS A60S
CHAINCOVER	SKS Chainbow
CARRIERS	Racktime Eco2.0 - Imm system
EXTERNAL LIGHTS	F: Herrmans MR GO - 120 lumen R: Axa BlueLine LED Lightguide

MOTOR	Active Plus, 36 V, 250 W
MAX TORQUE	50 Nm
SENSOR TYPE	Torque
BATTERY	PowerPack 400, weight 2,5 kg
CHARGER TYPE	2 A
CHARGE TIME	Up to 6,5 hours
MAX ASSISTED SPEED	25 km/h
DISPLAY	Purion
ASSISTANCE	Eco: 55 % Tour: 120 % Sport: 200 % Turbo: 300 %

GREEN/ANTHRACITE	
50	0115297306
53	0115297316

E-TREKKING

B-TOUR A5.4 X5 LADY

BOSCH | ACTIVE PLUS | POWERPACK 400 | PURION | 28" | 9 S



FRAME	Alu, 700C, Hydroformed, Internal PowerPack battery, Tapered, Internal routing, QR
FORK	Suntour NEX, Coil, Travel 63 mm, QR // Zoom 187D - 188D
HEADSET	Acros for Phyotn, 1,5", Internal routing
CRANKSET	Miranda, 38T
REAR DERAILLEUR	Sram Rear Derailleur, X5 9s
SHIFTERS LEVERS	Sram Shifter Lever X5 Multiple click, 9s
BRAKES	Shimano BR-MT200, Rotor SM-RT10 180 mm/180 mm
CASSETTE	Sram Cassette PG-920, 9s, 11/34
PEDALS	Alu TKK
HUBS	F: Shimano TX505, CL, 32h R: Shimano TX505, CL, HG, 32h
RIMS	Radiale E25, eBike Ready, Tubeless Ready, 622x25c
STEM	Satori Python, Barbore 31.8 mm, Adjustable, Internal routing
HANDLEBAR	Satori Noirette City, 630 mm, Barbore 31.8 mm, Rise 21 mm, Back sweep 30°
SEATPOST	Satori Harmony, Suspended, 30.9 mm
SADDLE	Atala Memory Foam Trekking
TYRES	Schwalbe Energizer Active Plus, Punctureguard, TwinSkin, 700x50C // Victoria Randonneur
MUDGUARDS	SKS A60S
CHAINCOVER	SKS Chainbow
CARRIERS	Racktime Eco2.0 - Imm system
EXTERNAL LIGHTS	F: Herrmans MR GO - 120 lumen R: Axa BlueLine LED Lightguide

MOTOR	Active Plus, 36 V, 250 W
MAX TORQUE	50 Nm
SENSOR TYPE	Torque
BATTERY	PowerPack 400, weight 2,5 kg
CHARGER TYPE	2 A
CHARGE TIME	Up to 6,5 hours
MAX ASSISTED SPEED	25 km/h
DISPLAY	Purion
ASSISTANCE	Eco: 55 % Tour: 120 % Sport: 200 % Turbo: 300 %

WHITE/GREY	
45	0115297406
50	0115297416

B-TOUR A5.3 LT9 MAN

BOSCH | ACTIVE CRUISE | POWERPACK 400 | PURION | 28" | 9 S



FRAME	Alu 700C, hydroformed, internal powerpack, custom tubing, Internal routing, Forged interface
FORK	Suntour NEX-E25, 63 mm, Coil
HEADSET	Acros AZF-585, 1,5", Internal routing
CRANKSET	Miranda, 38T
REAR DERAILLEUR	LT, RD-V54009-L2, 9s
SHIFTERS LEVERS	LT, RD-V54009-9W, 9s
BRAKES	Clarks M2, Rotor 180mm/180mm
CASSETTE	LT, CS-A5, 9s, 11-34T
PEDALS	Alu TKK
HUBS	F: Shimano TX505, CL, 32h R: Shimano TX505, CL, HG, 32h
RIMS	Radiale E25, eBike Ready, Tubeless Ready, 622x25c
STEM	Satori Python, 31,8 mm, Adjustable, Internal routing
HANDLEBAR	Satori Noirette City, 630 mm
SEATPOST	Satori Harmony, Suspended, 30.9 mm
SADDLE	Atala Memory Foam Trekking
TYRES	Schwalbe Energizer Active Plus, Punctureguard, TwinSkin, 700x50C
MUDGUARDS	SKS A60S
CHAINCOVER	SKS Chainbow
CARRIERS	Racktime Eco2.0 - Imm system
EXTERNAL LIGHTS	F: Herrmans MR GO - 120 lumen R: Axa BlueLine LED Lightguide

MOTOR	Active Plus 36 V, 250 W
MAX TORQUE	65 Nm
SENSOR TYPE	Torque
BATTERY	PowerPack 400 Horizontal, frametype, 2,8 kg
CHARGER TYPE	2 A
CHARGE TIME	Up to 6,5 hours
MAX ASSISTED SPEED	25 km/h
DISPLAY	Purion
ASSISTANCE	Eco: 55 % Tour: 120 % Sport: 200 % Turbo: 300 %

GREEN/ANTHRACITE	
50	0115297304
53	0115297314

B-TOUR A5.3 LT9 LADY

BOSCH | ACTIVE CRUISE | POWERPACK 400 | PURION | 28" | 9 S



FRAME	Alu 700C, hydroformed, internal powerpack, custom tubing, Internal routing, Forged interface
FORK	Suntour NEX-E25, 63 mm, Coil
HEADSET	Acros AZF-585, 1,5", Internal routing
CRANKSET	Miranda, 38T
REAR DERAILLEUR	LT, RD-V54009-L2, 9s
SHIFTERS LEVERS	LT, RD-V54009-9W, 9s
BRAKES	Clarks M2, Rotor 180mm/180mm
CASSETTE	LT, CS-A5, 9s, 11-34T
PEDALS	Alu TKK
HUBS	F: Shimano TX505, CL, 32h R: Shimano TX505, CL, HG, 32h
RIMS	Radiale E25, eBike Ready, Tubeless Ready, 622x25c
STEM	Satori Python, 31,8 mm, Adjustable, Internal routing
HANDLEBAR	Satori Noirette City, 630 mm
SEATPOST	Satori Harmony, Suspended, 30.9 mm
SADDLE	Atala Memory Foam Trekking
TYRES	Schwalbe Energizer Active Plus, Punctureguard, TwinSkin, 700x50C
MUDGUARDS	SKS A60S
CHAINCOVER	SKS Chainbow
CARRIERS	Racktime Eco2.0 - Imm system
EXTERNAL LIGHTS	F: Herrmans MR GO - 120 lumen R: Axa BlueLine LED Lightguide

MOTOR	Active Plus 36 V, 250 W
MAX TORQUE	65 Nm
SENSOR TYPE	Torque
BATTERY	PowerPack 400 Horizontal, frametype, 2,8 kg
CHARGER TYPE	2 A
CHARGE TIME	Up to 6,5 hours
MAX ASSISTED SPEED	25 km/h
DISPLAY	Purion
ASSISTANCE	Eco: 55 % Tour: 120 % Sport: 200 % Turbo: 300 %

WHITE/GREY	
45	0115297404
50	0115297414

B-TOUR A4.4 LT7 MAN

BOSCH | ACTIVE CRUISE | POWERPACK 400 | PURION | 28" | 7 S



FRAME	Alu, 700C, Hydroformed, Internal PowerPack battery, Tapered, Internal routing, QR
FORK	Suntour NEX, Coil, Travel 63 mm, QR // Zoom 187D - 188D
HEADSET	Acros universal, 1,5", Internal routing
CRANKSET	Miranda, 38T
REAR DERAILLEUR	LT, RD-V4007-M-2, 7s
SHIFTERS LEVERS	LT, SL-V4007-7W-2, 7s
BRAKES	Shimano BR-MT200, Rotor SM-RT10 180 mm/180 mm
FREEWHEEL	LT, FW-207, 7s, 13-28T
PEDALS	Alu TKK
HUBS	F: Shimano TX505, CL, 32h R: Shimano TX505, CL, HG, 32h
RIMS	Radiale E25, eBike Ready, Tubeless Ready, 622x25c
STEM	Alu, Barbore 31.8 mm, Adjustable
HANDLEBAR	Alu, 640 mm, Barbore 31.8 mm, Rise 25 mm, Back sweep 25°
SEATPOST	Alu, 30.9 mm
SADDLE	Atala Memory Foam Trekking
TYRES	Schwalbe Energizer Active Plus, Punctureguard, TwinSkin, 700x50C // Victoria Randonneur
MUDGUARDS	SKS A60S
CHAINCOVER	SKS Chainbow
CARRIERS	Alu, without brackets
EXTERNAL LIGHTS	F: Herrmans MR GO - 120 lumen R: Axa BlueLine LED Lightguide

MOTOR	Active, 36 V, 250 W
MAX TORQUE	40 Nm
SENSOR TYPE	Torque
BATTERY	PowerPack 400, weight 2,5 kg
CHARGER TYPE	2 A
CHARGE TIME	Up to 6,5 hours
MAX ASSISTED SPEED	25 km/h
DISPLAY	Purion
ASSISTANCE	Eco: 40 % Tour: 100 % Sport: 170 % Turbo: 250 %

ANTHRACITE/BLACK	
50	0115297504
53	0115297514

B-TOUR A4.4 LT7 LADY

BOSCH | ACTIVE CRUISE | POWERPACK 400 | PURION | 28" | 7 S



FRAME	Alu, 700C, Hydroformed, Internal PowerPack battery, Tapered, Internal routing, QR
FORK	Suntour NEX, Coil, Travel 63 mm, QR // Zoom 187D - 188D
HEADSET	Acros universal, 1,5", Internal routing
CRANKSET	Miranda, 38T
REAR DERAILLEUR	LT, RD-V4007-M-2, 7s
SHIFTERS LEVERS	LT, SL-V4007-7W-2, 7s
BRAKES	Shimano BR-MT200, Rotor SM-RT10 180 mm/180 mm
FREEWHEEL	LT, FW-207, 7s, 13-28T
PEDALS	Alu TKK
HUBS	F: Shimano TX505, CL, 32h R: Shimano TX505, CL, HG, 32h
RIMS	Radiale E25, eBike Ready, Tubeless Ready, 622x25c
STEM	Alu, Barbore 31.8 mm, Adjustable
HANDLEBAR	Alu, 640 mm, Barbore 31.8 mm, Rise 25 mm, Back sweep 25°
SEATPOST	Alu, 30.9 mm
SADDLE	Atala Memory Foam Trekking
TYRES	Schwalbe Energizer Active Plus, Punctureguard, TwinSkin, 700x50C // Victoria Randonneur
MUDGUARDS	SKS A60S
CHAINCOVER	SKS Chainbow
CARRIERS	Alu, without brackets
EXTERNAL LIGHTS	F: Herrmans MR GO - 120 lumen R: Axa BlueLine LED Lightguide

MOTOR	Active, 36 V, 250 W
MAX TORQUE	40 Nm
SENSOR TYPE	Torque
BATTERY	PowerPack 400, weight 2,5 kg
CHARGER TYPE	2 A
CHARGE TIME	Up to 6,5 hours
MAX ASSISTED SPEED	25 km/h
DISPLAY	Purion
ASSISTANCE	Eco: 40 % Tour: 100 % Sport: 170 % Turbo: 250 %

GREEN/ANTHRACITE	
45	0115297604
50	0115297614
53	0115297624

E-TREKKING

B-TOUR EVERGLADES

BOSCH | PERFORMANCE LINE | POWERTUBE 500 | PURION | 28" | 9 S



FRAME	Alu, 700C, Hydroformed, Integrated battery, Tapered, Internal routing, QR
FORK	Zoom 187D AMS, Coil, 28", Travel 65 mm, QR
HEADSET	Acros for Phyotn, 1,5", Internal routing
CRANKSET	Miranda, 38T
REAR DERAILLEUR	Sram Rear Derailleur, X5 9s
SHIFTERS LEVERS	Sram Shifter Lever X5 Multiple click, 9s
BRAKES	Shimano BR-MT200, Rotor Clarks 180 mm/180 mm
CASSETTE	Sram Cassette PG-920, 9s, 11/34
PEDALS	Alu TKK
HUBS	F: Shimano TX505, CL, 32h R: Shimano TX505, CL, HG, 32h
RIMS	Rodi Viper 28, 622x23
STEM	Satori Python, Barbore 31.8 mm, Adjustable, Internal routing
HANDLEBAR	Satori Noirette City, 630 mm, Barbore 31.8 mm, Rise 21 mm, Back sweep 30°
SEATPOST	Satori Harmony, Suspended, 31.6 mm
SADDLE	Sella Italia,Modelx SuperFlow Comfort
TYRES	Continental, Contact Cruiser, Black reflex, 55-622
MUDGUARDS	SKS A60S
CHAINCOVER	SKS Chainbow
CARRIERS	Alu, without brackets
EXTERNAL LIGHTS	F: Herrmans MR GO - 120 lumen R: Axa BlueLine LED Lightguide

MOTOR	Performance Line 36 V, 250 W
MAX TORQUE	65 Nm
SENSOR TYPE	Torque
BATTERY	PowerTube 500 Horizontal, weight 2.9 kg
CHARGER TYPE	2 A
CHARGE TIME	Up to 7,5 hours
MAX ASSISTED SPEED	25 km/h
DISPLAY	Purion
ASSISTANCE	Eco: 55 % Tour: 120 % Sport: 200 % Turbo: 300 %

	SILVER
45	0115328700



CLEVER XC.5 GEN2 MAN

AM80 agile | AGILE GEN2 | 630WH | A16 TFT COLOUR REMOTE BT | 27,5" | 12 S



FRAME	Alu. Hydroformed 700c, internal battery, internal cables, flat welding
FORK	Suntour NX1 LO 29", Air, alu with alu crown,Tapered, 100mm travel, 32mm stanchions, thru axle 15x100, with hydraulic lockoutor / HL CH-860S 29", magnesium with alu crown, Tapered, 100mm travel, 32mm stanchions, with hydraulic lockout
HEADSET	ACROS tapered for integrated cables
CRANKSET	Alu 170mm, FSA 38T
REAR DERAILLEUR	Shimano Deore RD-M6100
SHIFTERS LEVERS	Shimano Deore SL-M6100, 12s
BRAKES	Shimano BR-MT200 hydraulic disc, Rotor 180 mm CL
CASSETTE	Shimano Deore CS-M6100 12s 10-51T
PEDALS	Alu Freeride
HUBS	Shimano HB-TC500 or HBTX505 / FH-QC500 32h, CL
RIMS	Radiale E25 27,5", double wall, 32h, disc
STEM	Au over, ahead, adjustable, light/SP mount
HANDLEBAR	Alu over TKK, 640mm, rise 25mm
SEATPOST	Alu with clamp, 30,9mm
SADDLE	Selle Royal SRX Vacum
TYRES	Schwalbe G-ONE Allround 27,5x2,25", with reflecting line, puncture proof
MUDGUARDS	SKS A65R Single stay
CHAINCOVER	FSA alu bash guard
CARRIERS	Rear alu 14mm with spring, 25kg load
EXTERNAL LIGHTS	Axa front (45 lux) with DRL and twilight sensor and rear LED with brake function

MOTOR	AM80 Agile Gen2 CAN, 36V, mid motor
POWER	Rated: 250W, Max: 520W
MAX TORQUE	100 Nm
SENSOR TYPE	Torque
BATTERY	Phylion Li-Ion 36V, 630Wh, inside frame, with Smart BMS CAN, 3,04Kg
CHARGER TYPE	2A Europlug
CHARGE TIME	100%: 9h15m / 80%: 7h
MAX ASSISTED SPEED	25 km/h
DISPLAY	A16 TFT Colour CAN, with remote control, USB and Bluetooth
ASSISTANCE	5 levels of Support: Preset or editable by Mobile App

OTHER FUNCTIONS

Walking assistance, External light control, Light sensor, Brakimg light, Daytime Running Light, Speed/distance/power information, Battery information, Bluetooth for mobile App, USB power socket

NOTE	kickstand Ursus adjustable rear, bell, keyring

FLAT ANTHRACITE	
49	0115323000

CLEVER 9.5 GEN2 MAN

AM80 agile | AGILE GEN2 | 630WH | A16 TFT COLOUR REMOTE BT | 28" | 9 S



FRAME	Alu. Hydroformed 700c, internal battery, internal cables
FORK	Suntour NVX30 NLO 700c, alu with alu crown, 63mm travel, 30mm stanchions, with hydraulic lockout
HEADSET	FSA integrated ahead 1"1/8
CRANKSET	Alu 170mm, 38T
REAR DERAILLEUR	Shimano Cues RD-U3020
SHIFTERS LEVERS	Shimano Cues SL-U4000, 9s
BRAKES	Shimano BR-MT200 hydraulic disc, Rotor 180 mm CL
CASSETTE	Shimano Cues CS-LG300 9s 11-36T
PEDALS	Alu Comfort
HUBS	Shimano QC300 36h, CL, quick release
RIMS	Radiale E25 700c, double wall, 36h, disc
STEM	Au over, ahead, adjustable
HANDLEBAR	Alu over TKK, 640mm, rise 25mm
SEATPOST	Suspended 40mm, 30,9mm
SADDLE	Selle Royal Vivo Ergo Vacum Light
TYRES	Schwalbe Energizer Plus 700x55c, with reflecting line, puncture proof
MUDGUARDS	SKS A65R Single stay
CHAINCOVER	Herrmans Fuse
CARRIERS	Rear alu 14mm with spring, 25kg load
EXTERNAL LIGHTS	Axa front (45 lux) with DRL and twilight sensor and rear LED with brake function

MOTOR	AM80 Agile Gen2 CAN, 36V, mid motor
POWER	Rated: 250W, Max: 520W
MAX TORQUE	100 Nm
SENSOR TYPE	Torque
BATTERY	Phylion Li-Ion 36V, 630Wh, inside frame, with Smart BMS CAN, 3,04Kg
CHARGER TYPE	2A Europlug
CHARGE TIME	100%: 9h15m / 80%: 7h
MAX ASSISTED SPEED	25 km/h
DISPLAY	A16 TFT Colour CAN, with remote control, USB and Bluetooth
ASSISTANCE	5 levels of Support: Preset or editable by Mobile App

OTHER FUNCTIONS

Walking assistance, External light control, Light sensor, Brakimg light, Daytime Running Light, Speed/distance/power information, Battery information, Bluetooth for mobile App, USB power socket

NOTE	kickstand Ursus adjustable rear, bell, keyring

METALLIC RED SATIN	
49	0115323100

CLEVER 9.4 GEN2 MAN

AM80 agile | AGILE GEN2 | 603WH | A10 LCD REMOTE | 28" | 9 S



FRAME	Alu. Hydroformed 700c, internal battery, internal cables
FORK	Suntour NVX30 NLO 700c, alu with alu crown,63mm travel, 30mm stanchions, whith hydraulic lockout
HEADSET	FSA integrated ahead 1"1/8
CRANKSET	Alu 170mm, FSA 38T
REAR DERAILLEUR	Shimano Alivio RD-M3100
SHIFTERS LEVERS	Shimano Alivio SL-M3100, 9s
BRAKES	Shimano BR-MT200 hydraulic disc, Rotor 180 mm CL
CASSETTE	Shimano HG200 9s 11-36
PEDALS	Alu Comfort
HUBS	Shimano TX505 32h, CL, quick release
RIMS	Radiale E25 700c, double wall, 32h, disc
STEM	Au over, ahead, adjustable
HANDLEBAR	Alu over TKK, 640mm, rise 25mm
SEATPOST	Suspended 40mm, 30,9mm
SADDLE	Selle Royal Lancia
TYRES	Schwalbe Energizer Plus 700x55c, with reflecting line, puncture proof
MUDGUARDS	Single stay speedy, edge
CHAINCOVER	L type, edge
CARRIERS	Rear alu 14mm with spring, 25kg load
EXTERNAL LIGHTS	Axa front (30 lux) and rear LED, controlled by display and twilight sensor

MOTOR	AM80 Agile Gen2 CAN, 36V, mid motor
POWER	Rated: 250W, Max: 520W
MAX TORQUE	100 Nm
SENSOR TYPE	Torque
BATTERY	Phylion Li-Ion 36V, 603Wh, inside frame, with Smart BMS CAN, 3,45Kg
CHARGER TYPE	2A Europlug
CHARGE TIME	100%: 8h:52m / 80%: 6h42m
MAX ASSISTED SPEED	25 km/h
DISPLAY	Atala A10 LCD CAN, glass/metal with remote control
ASSISTANCE	5 levels of Support

OTHER FUNCTIONS

Walking assistance, External light control, Speed information, Battery information

NOTE	kickstand Ursus adjustable rear, bell, keyring

BLUE NAVY MATT	
49	0115310500

CLEVER 9.4 GEN2 LADY

AM80 agile | AGILE GEN2 | 603WH | A10 LCD REMOTE | 28" | 9 S



FRAME	Alu. Hydroformed 700c, internal battery, internal cables
FORK	Suntour NVX30 NLO 700c, alu with alu crown,63mm travel, 30mm stanchions, whith hydraulic lockout
HEADSET	FSA integrated ahead 1"1/8
CRANKSET	Alu 170mm, FSA 38T
REAR DERAILLEUR	Shimano Alivio RD-M3100
SHIFTERS LEVERS	Shimano Alivio SL-M3100, 9s
BRAKES	Shimano BR-MT200 hydraulic disc, Rotor 180 mm CL
CASSETTE	Shimano HG200 9s 11-36
PEDALS	Alu Comfort
HUBS	Shimano TX505 32h, CL, quick release
RIMS	Radiale E25 700c, double wall, 32h, disc
STEM	Au over, ahead, adjustable
HANDLEBAR	Alu over TKK, 640mm, rise 25mm
SEATPOST	Suspended 40mm, 30,9mm
SADDLE	Selle Royal Lancia
TYRES	Schwalbe Energizer Plus 700x55c, with reflecting line, puncture proof
MUDGUARDS	Single stay speedy, edge
CHAINCOVER	L type, edge
CARRIERS	Rear alu 14mm with spring, 25kg load
EXTERNAL LIGHTS	Axa front (30 lux) and rear LED, controlled by display and twilight sensor

MOTOR	AM80 Agile Gen2 CAN, 36V, mid motor
POWER	Rated: 250W, Max: 520W
MAX TORQUE	100 Nm
SENSOR TYPE	Torque
BATTERY	Phylion Li-Ion 36V, 603Wh, inside frame, with Smart BMS CAN, 3,45Kg
CHARGER TYPE	2A Europlug
CHARGE TIME	100%: 8h:52m / 80%: 6h42m
MAX ASSISTED SPEED	25 km/h
DISPLAY	Atala A10 LCD CAN, glass/metal with remote control
ASSISTANCE	5 levels of Support

OTHER FUNCTIONS

Walking assistance, External light control, Speed information, Battery information

NOTE	kickstand Ursus adjustable rear, bell, keyring

GREEN FOREST MATT

45	0115310605

CLEVER 8.4 GEN2 MAN

AM80 agile | AGILE GEN2 | 522WH | A10 LCD REMOTE | 28" | 8 S



FRAME	Alu. Hydroformed 700c, internal battery, internal cables
FORK	HL CH-187 HLO 700c, alu with alu crown, 65mm travel, 30mm stanchions
HEADSET	FSA integrated ahead 1"1/8
CRANKSET	Alu 170mm, FSA 38T
REAR DERAILLEUR	Shimano Acera RD-M3020
SHIFTERS LEVERS	Shimano SL-M315 PushPull, 8s
BRAKES	Shimano BR-MT200 hydraulic disc, Rotor 180 mm CL
CASSETTE	Shimano HG200 8s 12-32
PEDALS	Alu Comfort
HUBS	Shimano TX505 32h, CL, quick release
RIMS	Radiale E25 700c, double wall, 32h, disc
STEM	Au over, ahead, adjustable
HANDLEBAR	Alu over TKK, 640mm, rise 25mm
SEATPOST	Suspended 40mm, 30,9mm
SADDLE	Selle Royal Lancia
TYRES	Schwalbe Road Cruiser 700x47c, with reflecting line, puncture proof
MUDGUARDS	Single stay speedy, edge
CHAINCOVER	L type, edge
CARRIERS	Rear alu 14mm with spring, 25kg load
EXTERNAL LIGHTS	Axa front (30 lux) and rear LED, controlled by display and twilight sensor

MOTOR	AM80 Agile Gen2 CAN, 36V, mid motor
POWER	Rated: 250W, Max: 520W
MAX TORQUE	100 Nm
SENSOR TYPE	Torque
BATTERY	Phylion Li-Ion 36V, 522Wh, inside frame, with Smart BMS CAN, 3,30Kg
CHARGER TYPE	2A Europlug
CHARGE TIME	100%: 7h:45m / 80%: 5h48m
MAX ASSISTED SPEED	25 km/h
DISPLAY	Atala A10 LCD CAN, glass/metal with remote control
ASSISTANCE	5 levels of Support

OTHER FUNCTIONS

Walking assistance, External light control, Speed information, Battery information

NOTE	kickstand Ursus adjustable rear, bell, keyring

ANTHRACITE MATT	
49	0115310700
54	0115310750

E-TREKKING

CLEVER 8.4 GEN2 LADY

AM80 agile | AGILE GEN2 | 522WH | A10 LCD REMOTE | 28" | 8 S



FRAME	Alu. Hydroformed 700c, internal battery, internal cables
FORK	HL CH-187 HLO 700c, alu with alu crown, 65mm travel, 30mm stanchions
HEADSET	FSA integrated ahead 1"1/8
CRANKSET	Alu 170mm, FSA 38T
REAR DERAILLEUR	Shimano Acera RD-M3020
SHIFTERS LEVERS	Shimano SL-M315 PushPull, 8s
BRAKES	Shimano BR-MT200 hydraulic disc, Rotor 180 mm CL
CASSETTE	Shimano HG200 8s 12-32
PEDALS	Alu Comfort
HUBS	Shimano TX505 32h, CL, quick release
RIMS	Radiale E25 700c, double wall, 32h, disc
STEM	Au over, ahead, adjustable
HANDLEBAR	Alu over TKK, 640mm, rise 25mm
SEATPOST	Suspended 40mm, 30,9mm
SADDLE	Selle Royal Lancia
TYRES	Schwalbe Road Cruiser 700x47c, with reflecting line, puncture proof
MUDGUARDS	Single stay speedy, edge
CHAINCOVER	L type, edge
CARRIERS	Rear alu 14mm with spring, 25kg load
EXTERNAL LIGHTS	Axa front (30 lux) and rear LED, controlled by display and twilight sensor

MOTOR	AM80 Agile Gen2 CAN, 36V, mid motor
POWER	Rated: 250W, Max: 520W
MAX TORQUE	100 Nm
SENSOR TYPE	Torque
BATTERY	Phylion Li-Ion 36V, 522Wh, inside frame, with Smart BMS CAN, 3,30Kg
CHARGER TYPE	2A Europlug
CHARGE TIME	100%: 7h:45m / 80%: 5h48m
MAX ASSISTED SPEED	25 km/h
DISPLAY	Atala A10 LCD CAN, glass/metal with remote control
ASSISTANCE	5 levels of Support

OTHER FUNCTIONS

Walking assistance, External light control, Speed information, Battery information

NOTE	kickstand Ursus adjustable rear, bell, keyring

ULTALIGHT MATT

45	0115310805

CLEVER 8.5 GEN2 MAN

AM80 agile | AGILE GEN2 | 522WH | A23 LCD BT | 28" | 8 S



FRAME	Alu. Hydroformed 700c, internal battery, internal cables
FORK	Suntour NEX 700c, alu with alu crown, 50mm travel or HL CH-187 700c, alu with alu crown, 65mm travel, 30mm stanchions, with non with hydraulic lockout
HEADSET	FSA integrated ahead 1"1/8
CRANKSET	Alu 170mm, 38T
REAR DERAILLEUR	Shimano Acera RD-M3020
SHIFTERS LEVERS	Shimano SL-M315 PushPull, 8s
BRAKES	Shimano BR-MT200 hydraulic disc, Rotor 160 mm CL
CASSETTE	Shimano HG200 8s 12-32T
PEDALS	Alu Comfort
HUBS	Shimano QC300 36h, CL, quick release
RIMS	Radiale E25 700c, double wall, 36h, disc
STEM	Au over, ahead, adjustable
HANDLEBAR	Alu over TKK, 640mm, rise 25mm
SEATPOST	Alu with clamp, 30,9mm
SADDLE	Selle Royal Vivo Ergo Vacum Light
TYRES	Schwalbe Energizer Active Plus 700x50c, with reflecting line, puncture proof
MUDGUARDS	PLS58 Single stay
CHAINCOVER	Herrmans Fuse
CARRIERS	Rear alu 14mm with spring, 25kg load
EXTERNAL LIGHTS	Axa front (45 lux) with DRL and rear LED with brake function

MOTOR	AM80 Agile Gen2 CAN, 36V, mid motor
POWER	Rated: 250W, Max: 520W
MAX TORQUE	100 Nm
SENSOR TYPE	Torque
BATTERY	Phylion Li-Ion 36V, 522Wh, inside frame, with Smart BMS CAN, 3,26Kg
CHARGER TYPE	2A Europlug
CHARGE TIME	100%: 7h45m / 80%: 5h48m
MAX ASSISTED SPEED	25 km/h
DISPLAY	A23 LCD CAN, Bluetooth
ASSISTANCE	5 levels of Support: Preset or editable by Mobile App

OTHER FUNCTIONS

Walking assistance, External light control, Brakimg light, Daytime Running Light, Speed/distance/power information, Battery %, Bluetooth for mobile App

NOTE	kickstand Ursus adjustable rear, bell, keyring

SILVER SATIN	
49	0115323300

CLEVER 7.5 GEN2 26” LADY

AM80 agile | AGILE GEN2 | 522WH | A23 LCD BT | 26” | 7 S



FRAME	Alu. Hydroformed, internal battery, internal cables
FORK	HLCH-187 26” Alu with alu crown. 60mm travel, 30mm stanchions
HEADSET	FSA integrated ahead 1”1/8
CRANKSET	Alu 170mm, Miche 38T
REAR DERAILLEUR	Shimano Altus RD-M310
SHIFTERS LEVERS	Shimano SL-M315 PushPull, 7s
BRAKES	Shimano BR-MT200 hydraulic disc, Rotor 160 mm CL
CASSETTE	Shimano HG200 7s 12-32
PEDALS	Resin antislip
HUBS	Shimano HB-QC300/FH-TY505 32h, CL, quick release
RIMS	Radiale 26”, double wall, 32h, disc
STEM	Au over, ahead, adjustable
HANDLEBAR	Alu over TKK, 640mm, rise 25mm
SEATPOST	Aalu with clamp, 30,9mm
SADDLE	City Ergo
TYRES	Byte Garda 26”x2,10”, with reflecting line
MUDGUARDS	Single stay speedy, edge
CHAINCOVER	L type, edge
CARRIERS	Rear alu 14mm with spring, 25kg load
EXTERNAL LIGHTS	Axa front (15 lux) and rear LED, controlled by display

MOTOR	AM80 Agile Gen2 CAN, 36V, mid motor
POWER	Rated: 250W, Max: 520W
MAX TORQUE	100 Nm
SENSOR TYPE	Torque
BATTERY	Phylion Li-Ion 36V, 522Wh, inside frame, with Smart BMS CAN, 3,26Kg
CHARGER TYPE	2A Europlug
CHARGE TIME	100%: 7h45m / 80%: 5h48m
MAX ASSISTED SPEED	25 km/h
DISPLAY	A23 LCD CAN, Bluetooth
ASSISTANCE	5 levels of Support

OTHER FUNCTIONS

Walking assistance, External light control, Daytime Running Light, Speed/distance/power information, Battery %, Bluetooth for mobile App

NOTE	kickstand Ursus adjustable rear, bell, keyring

GREEN FOREST MATT	
45	0115311070

E-TREKKING

CLEVER 7.4 GEN2 MAN

AM80 agile | AGILE GEN2 | 522WH | A23 LCD SIDE | 28" | 7 S



FRAME	Alu. Hydroformed 700c, internal battery, internal cables
FORK	Suntour NEX 700c, alu with alu crown, 63mm travel
HEADSET	FSA integrated ahead 1"1/8
CRANKSET	Alu 170mm, Miche 38T
REAR DERAILLEUR	Shimano Altus RD-M310
SHIFTERS LEVERS	Shimano SL-M315 PushPull, 7s
BRAKES	Shimano BR-MT200 hydraulic disc, Rotor 160 mm CL
CASSETTE	Shimano HG200 7s 12-32
PEDALS	Resin antislip
HUBS	Shimano TX505 32h, CL, quick release
RIMS	Radiale E25 700c, double wall, 32h, disc
STEM	Au over, ahead, adjustable
HANDLEBAR	Alu over TKK, 640mm, rise 25mm
SEATPOST	Aalu with clamp, 30,9mm
SADDLE	Selle Royal Lancia
TYRES	Byte Trento 700x45c, with reflecting line
MUDGUARDS	Single stay speedy, edge
CHAINCOVER	L type, edge
CARRIERS	Rear alu 14mm with spring, 25kg load
EXTERNAL LIGHTS	Axa front (15 lux) and rear LED, controlled by display

MOTOR	AM80 Agile Gen2 CAN, 36V, mid motor
POWER	Rated: 250W, Max: 520W
MAX TORQUE	100 Nm
SENSOR TYPE	Torque
BATTERY	Phylion Li-Ion 36V, 522Wh, inside frame, with Smart BMS CAN, 3,30Kg
CHARGER TYPE	2A Europlug
CHARGE TIME	100%: 7h:45m / 80%: 5h48m
MAX ASSISTED SPEED	25 km/h
DISPLAY	Atala A23 LCD CAN, side
ASSISTANCE	5 levels of Support: Preset: or editable by Mobile App

OTHER FUNCTIONS

Walking assistance, External light control, Speed information, Power information, Battery information

NOTE	kickstand Ursus adjustable rear, bell, keyring

BLUE NAVY MATT

54	0115310950

CLEVER 7.4 GEN2 LADY

AM80 agile | AGILE GEN2 CAN | 522WH | A23 LCD SIDE | 28" | 7 S



FRAME	Alu. Hydroformed 700c, internal battery, internal cables
FORK	Suntour NEX 700c, alu with alu crown, 63mm travel
HEADSET	FSA integrated ahead 1"1/8
CRANKSET	Alu 170mm, Miche 38T
REAR DERAILLEUR	Shimano Altus RD-M310
SHIFTERS LEVERS	Shimano SL-M315 PushPull, 7s
BRAKES	Shimano BR-MT200 hydraulic disc, Rotor 160 mm CL
CASSETTE	Shimano HG200 7s 12-32
PEDALS	Resin antislip
HUBS	Shimano TX505 32h, CL, quick release
RIMS	Radiale E25 700c, double wall, 32h, disc
STEM	Au over, ahead, adjustable
HANDLEBAR	Alu over TKK, 640mm, rise 25mm
SEATPOST	Aalu with clamp, 30,9mm
SADDLE	Selle Royal Lancia
TYRES	Byte Trento 700x45c, with reflecting line
MUDGUARDS	Single stay speedy, edge
CHAINCOVER	L type, edge
CARRIERS	Rear alu 14mm with spring, 25kg load
EXTERNAL LIGHTS	Axa front (15 lux) and rear LED, controlled by display

MOTOR	AM80 Agile Gen2 CAN, 36V, mid motor
POWER	Rated: 250W, Max: 520W
MAX TORQUE	100 Nm
SENSOR TYPE	Torque
BATTERY	Phylion Li-Ion 36V, 522Wh, inside frame, with Smart BMS CAN, 3,30Kg
CHARGER TYPE	2A Europlug
CHARGE TIME	100%: 7h:45m / 80%: 5h48m
MAX ASSISTED SPEED	25 km/h
DISPLAY	Atala A23 LCD CAN, side
ASSISTANCE	5 levels of Support: Preset: or editable by Mobile App

OTHER FUNCTIONS

Walking assistance, External light control, Speed information, Power information, Battery information

NOTE	kickstand Ursus adjustable rear, bell, keyring

GREEN FOREST MATT

49	0115311050

CLEVER 7.2 MAN

AM80 agile | AGILE CAN | 418WH | A10 LCD REMOTE | 28" | 8 S



FRAME	Alu. Hydroformed 700c, integrated battery, internal cables
FORK	Suntour NEX 700c, alu with alu crown, 50mm
HEADSET	FSA integrated 1"1/8
CRANKSET	AM80 alu 170mm, FSA 38T
REAR DERAILLEUR	L-TWOO RD-V4009-L-2
SHIFTERS LEVERS	L-TWOO SL-V4009-9W-2
BRAKES	Shimano Clarks M2 hydraulic disc, Rotor 180 mm CL
CASSETTE	L-TWOO CS-A5 11-34
PEDALS	Resin antislip
HUBS	Shimano TX505 32h, CL, quick release
RIMS	Rodi 700c, double wall w/eylets, 32h, disc
STEM	Byte alu over, ahead, adjustable
HANDLEBAR	Byte alu over
SEATPOST	Byte suspended 40mm, 27,2mm
SADDLE	Selle Royal Lancia
TYRES	Byte Trento 700x45c, with reflecting line
MUDGUARDS	Single stay speedy
CHAINCOVER	Plastic, L type
CARRIERS	Rear alu 14mm with spring, 25kg load
EXTERNAL LIGHTS	Axa front (15 lux) and rear LED, controlled by display and twilight sensor

MOTOR	AM80 Agile CAN, 36V 250W
MAX TORQUE	80 Nm
SENSOR TYPE	Torque
BATTERY	Phylion Li-Ion 36V, 418Wh, on frame, with Smart BMS CAN
CHARGER TYPE	2A Europlug
CHARGE TIME	100%: 6h:30m / 80%: 4h40m
MAX ASSISTED SPEED	25 km/h
DISPLAY	Atala A10 LCD Smart CAN, with remote control
ASSISTANCE	5 levels of Support

OTHER FUNCTIONS
Walking assistance, External light control, Speed information, Battery information

NOTE	kickstand Ursus adjustable rear, bell, keyring

WHITE/ANTHRACITE VERSION LT	
49	0115309202
54	0115309252

E-TREKKING

CLEVER 7.2 LADY

AM80 agile | AGILE CAN | 418WH | A10 LCD REMOTE | 28" | 8 S



FRAME	Alu. Hydroformed 700c, integrated battery, internal cables
FORK	Suntour NEX 700c, alu with alu crown, 50mm
HEADSET	FSA integrated 1"1/8
CRANKSET	AM80 alu 170mm, FSA 38T
REAR DERAILLEUR	Shimano Acera RD-M360 / L-TWOO RD-V4009-L-2
SHIFTERS LEVERS	Shimano SL-M315 PushPull / L-TWOO SL-V4009-9W-2
BRAKES	Shimano BR-MT200 hydraulic disc, Rotor 180 mm CL /Clarks M2 hydraulic disc, Rotor 180 mm CL
CASSETTE	Shimano HG200 12-32 / L-TWOO CS-A5 11-34
PEDALS	Resin antislip
HUBS	Shimano TX505 32h, CL, quick release
RIMS	Rodi 700c, double wall w/eylets, 32h, disc
STEM	Byte alu over, ahead, adjustable
HANDLEBAR	Byte alu over
SEATPOST	Byte suspended 40mm, 27,2mm
SADDLE	Selle Royal Lancia
TYRES	Byte Trento 700x45c, with reflecting line
MUDGUARDS	Single stay speedy
CHAINCOVER	Plastic, L type
CARRIERS	Rear alu 14mm with spring, 25kg load
EXTERNAL LIGHTS	Axa front (15 lux) and rear LED, controlled by display and twilight sensor

MOTOR	AM80 Agile CAN, 36V 250W
MAX TORQUE	80 Nm
SENSOR TYPE	Torque
BATTERY	Phylion Li-Ion 36V, 418Wh, on frame, with Smart BMS CAN
CHARGER TYPE	2A Europlug
CHARGE TIME	100%: 6h:30m / 80%: 4h40m
MAX ASSISTED SPEED	25 km/h
DISPLAY	Atala A10 LCD Smart CAN, with remote control
ASSISTANCE	5 levels of Support

OTHER FUNCTIONS

Walking assistance, External light control, Speed information, Power information, Battery information

NOTE	kickstand Ursus adjustable rear, bell, keyring

ANTHRACITE/RED MATT	VERSION LT
49	0115309352
ANTHRACITE/RED MATT	**VERSION SHIMANO**
45	0115309300

DISTRICT 6.4 MAN

AM80 easy | EASY | 418WH | A19 DIGIT LED | 28" | 7 S



FRAME	Alu. Hydroformed 700c, integrated battery, internal cables
FORK	HL CH-187 700c, alu with alu crown, 65mm travel, 30mm stanchions
HEADSET	FSA integrated ahead 1"1/8
CRANKSET	Alu 170mm, Miche 38T
REAR DERAILLEUR	Shimano Tourney RD-TY500
SHIFTERS LEVERS	Shimano SL-M315 PushPull, 7s
BRAKES	Shimano BR-MT200 hydraulic disc, Rotor 160 mm CL
CASSETTE	Shimano HG200 7s 12-32
PEDALS	Resin antislip
HUBS	Shimano TX505 32h, CL, quick release
RIMS	Rodi 700c, double wall w/eylets, 32h, disc
STEM	Byte alu, ahead, adjustable
HANDLEBAR	Byte alu TKK, 630mm, rise 30mm
SEATPOST	Byte alu with clamp, 27,2mm
SADDLE	Selle Royal Shadow
TYRES	Byte Trento 700x45c, with reflecting line
MUDGUARDS	Single stay speedy, edge
CHAINCOVER	L type, edge
CARRIERS	Rear steel 10mm with spring, no bracket, 25kg load
EXTERNAL LIGHTS	Axa front (15 lux) and rear LED, controlled by display

MOTOR	AM80 Easy UART, 36V, mid motor
POWER	250W, Max: 455W
MAX TORQUE	70 Nm
SENSOR TYPE	Torque
BATTERY	Phylion Li-Ion 36V, 418Wh, on frame, with Smart BMS UART
CHARGER TYPE	2A Europlug
CHARGE TIME	100%: 6h:18m / 80%: 4h38m
MAX ASSISTED SPEED	25 km/h
DISPLAY	Atala A19 Digit LED UART
ASSISTANCE	5 levels of Support

OTHER FUNCTIONS

Walking assistance, External light control,Speed/distance information, Battery %

NOTE	kickstand Ursus adjustable rear, bell, keyring

ANTHRACITE MATT

49	0115311100

E-TREKKING

DISTRICT 6.4 LADY

AM80 easy | EASY | 418WH | A19 DIGIT LED | 28" | 7 S



FRAME	Alu. Hydroformed 700c, integrated battery, internal cables
FORK	HL CH-187 700c, alu with alu crown, 65mm travel, 30mm stanchions
HEADSET	FSA integrated ahead 1"1/8
CRANKSET	Alu 170mm, Miche 38T
REAR DERAILLEUR	Shimano Tourney RD-TY500
SHIFTERS LEVERS	Shimano SL-M315 PushPull, 7s
BRAKES	Shimano BR-MT200 hydraulic disc, Rotor 160 mm CL
CASSETTE	Shimano HG200 7s 12-32
PEDALS	Resin antislip
HUBS	Shimano TX505 32h, CL, quick release
RIMS	Rodi 700c, double wall w/eylets, 32h, disc
STEM	Byte alu, ahead, adjustable
HANDLEBAR	Byte alu TKK, 630mm, rise 30mm
SEATPOST	Byte alu with clamp, 27,2mm
SADDLE	Selle Royal Shadow
TYRES	Byte Trento 700x45c, with reflecting line
MUDGUARDS	Single stay speedy, edge
CHAINCOVER	L type, edge
CARRIERS	Rear steel 10mm with spring, no bracket, 25kg load
EXTERNAL LIGHTS	Axa front (15 lux) and rear LED, controlled by display

MOTOR	AM80 Easy UART, 36V, mid motor
POWER	250W, Max: 455W
MAX TORQUE	70 Nm
SENSOR TYPE	Torque
BATTERY	Phylion Li-Ion 36V, 418Wh, on frame, with Smart BMS UART
CHARGER TYPE	2A Europlug
CHARGE TIME	100%: 6h:18m / 80%: 4h38m
MAX ASSISTED SPEED	25 km/h
DISPLAY	Atala A19 Digit LED UART
ASSISTANCE	5 levels of Support

OTHER FUNCTIONS
Walking assistance, External light control,Speed/distance information, Battery %

NOTE	kickstand Ursus adjustable rear, bell, keyring

	ULTRALIGHT MATT
45	0115311200



L'azienda produttrice si riserva il diritto di cambiare immagini, colori, specifiche e prezzi senza preavviso.
The manufacturing company takes the right to change pictures, colors, specs and prices without prior notice.

E-URBAN

Telai con geometrie sviluppate per il massimo comfort ed abbinati a sistemi elettrici che garantiscono migliori prestazioni ed autonomia.
Il telaio a entrata facilitata è perfetto per l'uso nel traffico cittadino ma ha anche rigidità adatta ad un uso su percorsi extra-urbani.
L'eBike diventa parte integrante della mobilità urbana. Dettagli come parafanghi, luci, portapacchi e gomme sono disegnati per una semplicità d'uso ed una durata nel tempo.

Frames with geometries developed for maximum comfort and combined with electrical systems that guarantee better performance and autonomy.
The easy-entry frame is perfect for use in city traffic but also has the rigidity needed for use on extra-urban routes.
The eBike becomes an integral part of urban mobility. Details such as mudguards, lights, luggage racks and tires are designed for ease of use and durability over time.



B-EASY A7.4

BOSCH | ACTIVE PLUS | POWERPACK 500 | PURION | 28" | 9 S



FRAME	Alu, 700C, Hydroformed, Easy access, Internal PowerPack battery, Tapered, Internal routing, QR
FORK	Suntour NEX, Coil, Travel 63 mm, QR //Zoom 187D - 188D
HEADSET	Acros for Phyotn, 1,5", Internal routing
CRANKSET	Miranda, 38T
REAR DERAILLEUR	Sram Rear Derailleur, X5 9s
SHIFTERS LEVERS	Sram Shifter Lever X5 Multiple click, 9s
BRAKES	Shimano BR-MT200, Rotor SM-RT10 180 mm/180 mm
FREEWHEEL	LT, FW-207, 7s, 13-28T
PEDALS	Alu TKK
HUBS	F: Shimano TX505, CL, 32h R: Chosen, QR, 32h, Threaded
RIMS	Radiale E25, eBike Ready, Tubeless Ready, 622x25c
STEM	Satori Python, Barbore 31.8 mm, Adjustable, Internal routing
HANDLEBAR	Satori Noirette City, 630 mm, Barbore 31.8 mm, Rise 21 mm, Back sweep 30°
SEATPOST	Alu, 30.9 mm
SADDLE	Atala Memory Foam City
TYRES	Schwalbe Energizer Active Plus, Punctureguard, TwinSkin, 700x50C
MUDGUARDS	SKS A60S
CHAINCOVER	SKS Chainbow
CARRIERS	Racktime Eco2.0 - Imm system
EXTERNAL LIGHTS	F: Herrmans MR GO - 120 lumen R: Axa BlueLine LED Lightguide

MOTOR	Active Plus, 36 V, 250 W
MAX TORQUE	50 Nm
SENSOR TYPE	Torque
BATTERY	PowerPack 500, weight 2,6 kg
CHARGER TYPE	2 A
CHARGE TIME	Up to 7,5 hours
MAX ASSISTED SPEED	25 km/h
DISPLAY	Purion
ASSISTANCE	Eco: 55 % Tour: 120 % Sport: 200 % Turbo: 300 %

BLACK/GREY	
45	0115297908
50	0115297918

B-EASY ACTIVE

BOSCH | ACTIVE PLUS | POWERPACK 400 | PURION | 28" | 8 S



FRAME	Alu, 700C, Hydroformed, Easy access, External PowerPack battery, Tapered, Internal routing, QR
FORK	Zoom 187D AMS, Coil, 28", Travel 65 mm, QR
HEADSET	Acros for Phyotn, 1,5", Internal routing
CRANKSET	Miranda, 38T
REAR DERAILLEUR	LT, RD-V4007-M-2, 7s
SHIFTERS LEVERS	LT, SL-V4007-7W-2, 7s
BRAKES	Shimano BR-MT200, Rotor SM-RT10 180 mm/180 mm
CASSETTE	Shimano CS-HG200, 7s, 12/32
PEDALS	Alu TKK
HUBS	F: Shimano TX505, CL, 32h R: Shimano TY505, CL, HG 7, 32h
RIMS	Rodi Viper 28, 622x23
STEM	Satori Python, Barbore 31.8 mm, Adjustable, Internal routing
HANDLEBAR	Satori Noirette City, 630 mm, Barbore 31.8 mm, Rise 21 mm, Back sweep 30°
SEATPOST	Alu, 30.9 mm
SADDLE	Sella Italia,Modelx SuperFlow Comfort
TYRES	Schwalbe Energizer Active Plus, Punctureguard, TwinSkin, 700x50C //
MUDGUARDS	Vittoria Randoneur
CHAINCOVER	SKS Chainbow
CARRIERS	Racktime Eco2.0 - Imm system
EXTERNAL LIGHTS	F: Herrmans MR GO - 120 lumen R: Axa BlueLine LED Lightguide

MOTOR	Active Plus, 36 V, 250 W
MAX TORQUE	40 Nm
SENSOR TYPE	Torque
BATTERY	PowerPack 400, weight 2,5 kg
CHARGER TYPE	2 A
CHARGE TIME	Up to 6,5 hours
MAX ASSISTED SPEED	25 km/h
DISPLAY	Purion
ASSISTANCE	Eco: 55 % Tour: 120 % Sport: 200 % Turbo: 300 %

	BLUE
45	0115300100

E-URBAN

B-EASY A6.4

BOSCH | ACTIVE PLUS | POWERPACK 400 | PURION | 28" | 7 S



FRAME	Alu, 700C, Hydroformed, Easy access, External PowerPack battery, Tapered, Internal routing, QR
FORK	Zoom 187D AMS, Coil, 28", Travel 65 mm, QR
HEADSET	Acros for Phyotn, 1,5", Internal routing
CRANKSET	Miranda, 38T
REAR DERAILLEUR	LT, RD-V4009-L-2, 9s
SHIFTERS LEVERS	LT, SL-V4009-9W-2, 9s
BRAKES	Shimano BR-MT200, Rotor SM-RT10 180 mm/180 mm
CASSETTE	LT, CS-A5, 9s, 11/34
PEDALS	Alu TKK
HUBS	F: Shimano TX505, CL, 32h R: Shimano TY505, CL, HG 7, 32h
RIMS	Radiale E25, eBike Ready, Tubeless Ready, 622x25c
STEM	Alu, Barbore 31.8 mm, Adjustable
HANDLEBAR	Alu, 640 mm, Barbore 31.8 mm, Rise 25 mm, Back sweep 25°
SEATPOST	Alu, 30.9 mm
SADDLE	Atala Memory Foam City
TYRES	Schwalbe Energizer Active Plus, Punctureguard, TwinSkin, 700x50C // Vittoria Randoneur
MUDGUARDS	SKS A60S
CHAINCOVER	SKS Chainbow
CARRIERS	Alu, without brackets
EXTERNAL LIGHTS	F: Herrmans MR GO - 120 lumen R: Axa BlueLine LED Lightguide

MOTOR	Active Plus, 36 V, 250 W
MAX TORQUE	40 Nm
SENSOR TYPE	Torque
BATTERY	PowerPack 400, weight 2,5 kg
CHARGER TYPE	2 A
CHARGE TIME	Up to 7,5 hours
MAX ASSISTED SPEED	25 km/h
DISPLAY	Purion
ASSISTANCE	Eco: 55 % Tour: 120 % Sport: 200 % Turbo: 300 %

WHITE/RED	
47	0115298007
50	0115298017

B-EASY CARMEL S

BOSCH | ACTIVE PLUS | POWERPACK 400 | PURION | 28" | 7 S



FRAME	Alu, 700C, Hydroformed, Easy access, Internal PowerPack battery, Tapered, Internal routing, QR
FORK	Zoom 187D AMS, Coil, 28", Travel 65 mm, QR
HEADSET	FSA No.10 1"1/8
CRANKSET	Miranda, 38T
REAR DERAILLEUR	Shimano RD-M3020, 8s
SHIFTERS LEVERS	Shimano Tourney SL-RV400 RevoShift, 8s
BRAKES	Shimano BR-MT200, Rotor 160 mm/160mm
CASSETTE	Shimano CS-HG200, 8s, 12/32
PEDALS	Alu TKK
HUBS	F: Chosen, QR, 36h R: Shimano TX505, CL, HG, 32h
RIMS	Rodi Viper 28, 622x23
STEM	Alu, Barbore 31.8 mm, Adjustable
HANDLEBAR	Alu, 640 mm, Barbore 31.8 mm, Rise 25 mm, Back sweep 25°
SEATPOST	Alu, 30.9 mm
SADDLE	Sella Italia, Modelx SuperFlow Comfort
TYRES	Continental, Contact Cruiser, Black reflex, 55-622
MUDGUARDS	SKS A60S
CHAINCOVER	SKS Chainbow
CARRIERS	Alu, without brackets
EXTERNAL LIGHTS	F: Herrmans MR GO - 120 lumen R: Axa BlueLine LED Lightguide

MOTOR	Active Plus, 36 V, 250 W
MAX TORQUE	50 Nm
SENSOR TYPE	Torque
BATTERY	PowerPack 400, weight 2,5 kg
CHARGER TYPE	2 A
CHARGE TIME	Up to 6,5 hours
MAX ASSISTED SPEED	25 km/h
DISPLAY	Purion
ASSISTANCE	Eco: 40 % Tour: 100 % Sport: 170 % Turbo: 250 %

	GREEN
45	0115328600

B-EASY A5.4

BOSCH | ACTIVE CRUISE | POWERPACK 300 | PURION | 28" | 7 S



FRAME	Alu, 700C, Hydroformed, Easy access, Internal PowerPack battery, Tapered, Internal routing, QR
FORK	Zoom 187D AMS, Coil, 28", Travel 65 mm, QR
HEADSET	Acros for Phyotn, 1,5", Internal routing
CRANKSET	Miranda, 38T
REAR DERAILLEUR	LT, RD-V4007-M-2, 7s
SHIFTERS LEVERS	LT, SL-V4007-7W-2, 7s
BRAKES	Shimano BR-MT200, Rotor SM-RT10 180 mm/180 mm
CASSETTE	Shimano CS-HG200, 7s, 12/32
PEDALS	Alu TKK
HUBS	F: Shimano TX505, CL, 32h R: Shimano TY505, CL, HG 7, 32h
RIMS	Radiale E25, eBike Ready, Tubeless Ready, 622x25c
STEM	Alu, Barbore 31.8 mm, Adjustable
HANDLEBAR	Alu, 640 mm, Barbore 31.8 mm, Rise 25 mm, Back sweep 25°
SEATPOST	Alu, 30.9 mm
SADDLE	Selle Royal Wave RVS
TYRES	Schwalbe Energizer Active Plus, Punctureguard, TwinSkin, 700x50C // Vittoria Randoneur
MUDGUARDS	SKS A60S
CHAINCOVER	SKS Chainbow
CARRIERS	Alu, without brackets
EXTERNAL LIGHTS	F: Herrmans MR GO - 120 lumen R: Axa BlueLine LED Lightguide

MOTOR	Active, 36 V, 250 W
MAX TORQUE	50 Nm
SENSOR TYPE	Torque
BATTERY	PowerPack 300, weight 2,5 kg
CHARGER TYPE	2 A
CHARGE TIME	Up to 5 hours
MAX ASSISTED SPEED	25 km/h
DISPLAY	Purion
ASSISTANCE	Eco: 40 % Tour: 100 % Sport: 170 % Turbo: 250 %

BLACK/ANTHRACITE	
47	0115309102

B-EASY RENT

BOSCH | ACTIVE LINE | POWERPACK 400 | PURION | 28" | 8 S



FRAME	Alu, 700C, Hydroformed, Easy access, External PowerPack battery, Tapered, Internal routing, QR
FORK	Zoom 187D AMS no Lockout Travel 65 mm, coll
HEADSET	Acros AZF-585, 1,5", internal routing threaded 1-1/8
CRANKSET	FSA CK200, 38T
REAR DERAILLEUR	Shimano M3020 Acera 8 s
SHIFTERS LEVERS	Shimano SLM 315 8s Rapidfire
BRAKES	Shimano BR-MT200, Rotor SM-RT10 160 mm/160 mm
CASSETTE	Shimano CS-HG200 8s 12/32
PEDALS	Alu TKK
HUBS	F: Shimano CL, HG 7, 32h QC300 R: R: Shimano CL, HG, 32h QC300
RIMS	RADIALE E25, eBike Ready, Tubeless Ready, 622x25c
STEM	Alu, ahead, Adjustable, 25,4mm
HANDLEBAR	City, 600 mm x 60, 25.4
SEATPOST	Alu, 31,6 mm Black Promax
SADDLE	Selle Royal Aurorae
TYRES	Schwalbe G-ONE All rond, Race Gurad 57-58 BB-SK ADDIX 67, 27`5 x 55 c
MUDGUARDS	SKS A60S
CHAINCOVER	FSA Bash guard
CARRIERS	Alu, without brackets
EXTERNAL LIGHTS	F: Herrmans MR GO - 120 lumen R: Axa BlueLine LED Lightguide

MOTOR	Smart System Active Line, 36V, 250W
MAX TORQUE	40 Nm
SENSOR TYPE	Torque
BATTERY	PowerPack 400, weight 2,5 kg
CHARGER TYPE	2 A
CHARGE TIME	Up to 5 hours
MAX ASSISTED SPEED	25 km/h
DISPLAY	Purion
ASSISTANCE	Eco: 40 % Tour: 100 % Sport: 170 % Turbo: 250 %

ANTHRACITE	
49	0115302400

CULT XC.5 GEN2

AM80 agile | AGILE GEN2 | 630WH | A16 TFT COLOUR REMOTE BT | 27,5" | 12 S



FRAME	Alu. Hydroformed 700c, easy access, internal battery, internal cables, flat welding
FORK	Suntour NX1 LO 29", Air, alu with alu crown,Tapered, 100mm travel, 32mm stanchions, thru axle 15x100, with hydraulic lockoutor / HL CH-860S 29", magnesium with alu crown, Tapered, 100mm travel, 32mm stanchions, with hydraulic lockout
HEADSET	ACROS tapered for integrated cables
CRANKSET	Alu 170mm, FSA 38T
REAR DERAILLEUR	Shimano Deore RD-M6100
SHIFTERS LEVERS	Shimano Deore SL-M6100, 12s
BRAKES	Shimano BR-MT200 hydraulic disc, Rotor 180 mm CL
CASSETTE	Shimano Deore CS-M6100 12s 10-51T
PEDALS	Alu Freeride
HUBS	Shimano HB-TC500 or HBTX505/FH-QC500 32h, CL
RIMS	Radiale E25 27,5", double wall, 32h, disc
STEM	Au over, ahead, adjustable, light/SP mount
HANDLEBAR	Alu over TKK, 640mm, rise 25mm
SEATPOST	Alu with clamp, 30,9mm
SADDLE	Selle Royal SRX Vacum
TYRES	Schwalbe G-ONE Allround 27,5x2,25", with reflecting line, puncture proof
MUDGUARDS	SKS A65R Single stay
CHAINCOVER	FSA alu bash guard
CARRIERS	Rear alu 14mm with spring, 25kg load
EXTERNAL LIGHTS	Axa front (45 lux) with DRL and twilight sensor and rear LED with brake function

MOTOR	AM80 Agile Gen2 CAN, 36V, mid motor
POWER	Rated: 250W, Max: 520W
MAX TORQUE	100 Nm
SENSOR TYPE	Torque
BATTERY	Phylion Li-Ion 36V, 630Wh, inside frame, with Smart BMS CAN, 3,04Kg
CHARGER TYPE	2A Europlug
CHARGE TIME	100%: 9h15m / 80%: 7h
MAX ASSISTED SPEED	25 km/h
DISPLAY	A16 TFT Colour CAN, with remote control, USB and Bluetooth
ASSISTANCE	5 levels of Support: Preset or editable by Mobile App

OTHER FUNCTIONS

Walking assistance, External light control, Light sensor, Brakimg light, Daytime Running Light, Speed/distance/power information, Battery information, Bluetooth for mobile App, USB power socket

NOTE	kickstand Ursus adjustable rear, bell, keyring

METALLIC ANTHRACITE MATT	
43	0115323600

CULT 9.5 28” GEN2

AM80 agile | AGILE GEN2 | 630WH | A16 TFT COLOUR REMOTE BT | 28” | 9 S



FRAME	Alu. Hydroformed 700c, easy access, internal battery, internal cables
FORK	Suntour NVX30 NLO 700c, alu with alu crown, 63mm travel, 30mm stanchions, with hydraulic lockout
HEADSET	FSA integrated ahead 1”1/8
CRANKSET	Alu 170mm, 38T
REAR DERAILLEUR	Shimano Cues RD-U3020
SHIFTERS LEVERS	Shimano Cues SL-U4000, 9s
BRAKES	Shimano BR-MT200 hydraulic disc, Rotor 180 mm CL
CASSETTE	Shimano Cues CS-LG300 9s 11-36T
PEDALS	Alu Comfort
HUBS	Shimano QC300 36h, CL, quick release
RIMS	Radiale E25 700c, double wall, 36h, disc
STEM	Au over, ahead, adjustable
HANDLEBAR	Alu over TKK, 640mm, rise 25mm
SEATPOST	Suspended 40mm, 30,9mm
SADDLE	Selle Royal Aurorae Vacum
TYRES	Schwalbe Energizer Plus 700x55c, with reflecting line, puncture proof
MUDGUARDS	SKS A65R Single stay
CHAINCOVER	Herrmans Fuse
CARRIERS	Rear alu 14mm with spring, 25kg load / Front alu on Head tube, 12kg load
EXTERNAL LIGHTS	Axa front (45 lux) with DRL and twilight sensor and rear LED with brake function

MOTOR	AM80 Agile Gen2 CAN, 36V, mid motor
POWER	Rated: 250W, Max: 520W
MAX TORQUE	100 Nm
SENSOR TYPE	Torque
BATTERY	Phylion Li-Ion 36V, 630Wh, inside frame, with Smart BMS CAN, 3,04Kg
CHARGER TYPE	2A Europlug
CHARGE TIME	100%: 9h15m / 80%: 7h
MAX ASSISTED SPEED	25 km/h
DISPLAY	A16 TFT Colour CAN, with remote control, USB and Bluetooth
ASSISTANCE	5 levels of Support: Preset or editable by Mobile App

OTHER FUNCTIONS

Walking assistance, External light control, Light sensor, Brakimg light, Daytime Running Light, Speed/distance/power information, Battery information, Bluetooth for mobile App, USB power socket

NOTE	kickstand Ursus adjustable rear, bell, keyring

PEARL WHITE	
43	0115323700

CULT 8.5 28" GEN2

AM80 agile | AGILE GEN2 | 522WH | A23 LCD BT | 28" | 8 S



FRAME	Alu. Hydroformed 700c, easy access, internal battery, internal cables
FORK	Suntour NEX 700c, alu with alu crown, 50mm travel or HL CH-187 700c, alu with alu crown, 65mm travel, 30mm stanchions, with hydraulic lockout
HEADSET	FSA integrated ahead 1"1/8
CRANKSET	Alu 170mm, 38T
REAR DERAILLEUR	Shimano Acera RD-M3020
SHIFTERS LEVERS	Shimano Tourney SL-RV400 RevoShift, 8s
BRAKES	Shimano BR-MT200 hydraulic disc, Rotor 160 mm CL
CASSETTE	Shimano HG200 8s 12-32
PEDALS	Alu Comfort
HUBS	Shimano QC300 36h, CL, quick release
RIMS	Radiale E25 700c, double wall, 36h, disc
STEM	Alu over, ahead, adjustable
HANDLEBAR	Alu over TKK, 640mm, rise 25mm
SEATPOST	Alu with clamp, 30,9mm
SADDLE	Selle Royal Aurorae Vacum
TYRES	Schwalbe Energizer Active Plus 700x50c, with reflecting line, puncture proof
MUDGUARDS	PLS58 Single stay
CHAINCOVER	Herrmans Fuse
CARRIERS	Rear alu 14mm with spring, 25kg load Front alu on Head tube, 12kg load
EXTERNAL LIGHTS	Axa front (45 lux) with DRL and rear LED with brake function

MOTOR	AM80 Agile Gen2 CAN, 36V, mid motor
POWER	Rated: 250W, Max: 520W
MAX TORQUE	100 Nm
SENSOR TYPE	Torque
BATTERY	Phylion Li-Ion 36V, 522Wh, inside frame, with Smart BMS CAN, 3,26Kg
CHARGER TYPE	2A Europlug
CHARGE TIME	100%: 9h15m / 80%: 7h
MAX ASSISTED SPEED	25 km/h
DISPLAY	A23 LCD CAN, Bluetooth
ASSISTANCE	5 levels of Support: Preset or editable by Mobile App

OTHER FUNCTIONS

Walking assistance, External light control, Brakimg light, Daytime Running Light, Speed/distance/power information, Battery %, Bluetooth for mobile App

NOTE	kickstand Ursus adjustable rear, bell, keyring

METALLIC RED SATIN	
43	0115323800

E-URBAN

CULT 8.5 26” GEN2

AM80 agile | AAGILE GEN2 | 522WH | A23 LCD BT | 26” | 8 S



FRAME	Alu. Hydroformed 26", easy access, internal battery, internal cables
FORK	HL CH-187 26", alu with alu crown, 60mm travel, 30mm stanchions
HEADSET	FSA integrated ahead 1”1/8
CRANKSET	Alu 170mm, 38T
REAR DERAILLEUR	Shimano Acera RD-M3020
SHIFTERS LEVERS	Shimano Tourney SL-RV400 RevoShift, 8s
BRAKES	Shimano BR-MT200 hydraulic disc, Rotor 160 mm CL
CASSETTE	Shimano HG200 8s 12-32
PEDALS	Alu Comfort
HUBS	Shimano QC300 36h, CL, quick release
RIMS	Radiale E25 26", double wall, 36h, disc
STEM	Alu over, ahead, adjustable
HANDLEBAR	Alu over TKK, 640mm, rise 60mm
SEATPOST	Aalu with clamp, 30,9mm
SADDLE	Selle Royal Aurorae Vacum
TYRES	Byte Garda 26”x2,10”, with reflecting line
MUDGUARDS	SKS A65 Single stay
CHAINCOVER	Herrmans Fuse
CARRIERS	Rear alu 14mm with spring, 25kg load / Front alu on Head tube, 12kg load
EXTERNAL LIGHTS	Axa front (45 lux) with DRL and twilight sensor and rear LED with brake function

MOTOR	AM80 Agile Gen2 CAN, 36V, mid motor
POWER	Rated: 250W, Max: 520W
MAX TORQUE	100 Nm
SENSOR TYPE	Torque
BATTERY	Phylion Li-Ion 36V, 522Wh, inside frame, with Smart BMS CAN, 3,26Kg
CHARGER TYPE	2A Europlug
CHARGE TIME	100%: 9h15m / 80%: 7h
MAX ASSISTED SPEED	25 km/h
DISPLAY	A16 TFT Colour CAN, with remote control, USB and Bluetooth
ASSISTANCE	5 levels of Support: Preset or editable by Mobile App

OTHER FUNCTIONS

Walking assistance, External light control, Light sensor, Brakimg light, Daytime Running Light, Speed/distance/power information, Battery %, Bluetooth for mobile App, USB power socket

NOTE	kickstand Ursus adjustable rear, bell, keyring

WHITE	
43	0115323900

CULT 7.2 28”

AM80 agile | AGILE CAN | 418WH | A10 LCD REMOTE | 28” | 7 S



FRAME	Alu. Hydroformed 700c, easy access, integrated battery, internal cables
FORK	Suntour NEX 700c, alu with alu crown, 50mm
HEADSET	FSA integrated 1”1/8
CRANKSET	AM80 alu 170mm, Miche 38T
REAR DERAILLEUR	Shimano Altus RD-M310
SHIFTERS LEVERS	Shimano Tourney SL-RS35 RevoShift, 7s
BRAKES	Shimano BR-MT200 hydraulic disc, Rotor 160 mm CL
CASSETTE	Shimano HG200 7s 12-32
PEDALS	Resin antislip
HUBS	Shimano TX505 32h, CL, quick release
RIMS	Rodi 700c, double wall w/eylets, 32h, disc
STEM	Byte alu over, ahead, adjustable
HANDLEBAR	Byte alu over
SEATPOST	Byte alu with clamp, 27,2mm
SADDLE	Selle Royal Aurorae w/elastomer
TYRES	Byte Trento 700x45c, with reflecting line
MUDGUARDS	Single stay speedy
CHAINCOVER	Plastic, L type
CARRIERS	Rear alu 14mm with spring, 25kg load
EXTERNAL LIGHTS	Axa front (15 lux) and rear LED, controlled by display and twilight sensor

MOTOR	AM80 Agile CAN, 36V 250W
MAX TORQUE	80 Nm
SENSOR TYPE	Torque
BATTERY	Phylion Li-Ion 36V, 418Wh, on frame, with Smart BMS CAN
CHARGER TYPE	2A Europlug
CHARGE TIME	100%: 6h:30m / 80%: 4h40m
MAX ASSISTED SPEED	25 km/h
DISPLAY	Atala A10 LCD Smart CAN, with remote control
ASSISTANCE	5 levels of Support

OTHER FUNCTIONS
Walking assistance, External light control, Speed information, Battery info

NOTE	kickstand Ursus adjustable rear, bell, keyring

GREY/BLUE NAVY MATT	
45	0115309700

CALIFFONE

AM80 agile | AGILE GEN2 | 630WH | A16 TFT COLOUR REMOTE BT | 20X4" | 7 S



FRAME	Alu. Hydroformed 20x4", easy access, internal battery, integrated carrier, internal cables, flat welding
FORK	HL CH-879 20" Fat, alu with alu crown, Tapered, 80mm travel, 32mm stanchions, with hydraulic lockout, 135mm axle
HEADSET	ACROS tapered for integrated cables
CRANKSET	Alu 155mm, FSA 44T
REAR DERAILLEUR	Shimano Altus RD-M310
SHIFTERS LEVERS	Shimano Tourney SL-RV400 RevoShift, 7s
BRAKES	Shimano BR-MT200 hydraulic disc, Rotor 180 mm INT
CASSETTE	Shimano HG200 7s 12-32
PEDALS	Resin antislip
HUBS	Alloy 36h, 135/170mm, Disc INT, quick release
RIMS	Alloy 20x4", double wall, 36h
STEM	Au over, ahead, adjustable, light/SP mount
HANDLEBAR	Alu over City, 680mm, rise 100mm
SEATPOST	Alu with clamp, 31,6mm
SADDLE	Selle Royal ON Vacum
TYRES	Fat City 20"x4"
MUDGUARDS	PLS110, no stays
CHAINCOVER	Herrmans Fuse
CARRIERS	Integrated with frame, w/alloy support plate, 25kg load
EXTERNAL LIGHTS	Axa front (45 lux) with DRL and twilight sensor and rear LED with brake function

MOTOR	AM80 Agile Gen2 CAN, 36V, mid motor
POWER	Rated: 250W, Max: 520W
MAX TORQUE	100 Nm
SENSOR TYPE	Torque
BATTERY	Phylion Li-Ion 36V, 630Wh, inside frame, with Smart BMS CAN, 3,04Kg
CHARGER TYPE	2A Europlug
CHARGE TIME	100%: 9h15m / 80%: 7h
MAX ASSISTED SPEED	25 km/h
DISPLAY	A16 TFT Colour CAN, with remote control, USB and Bluetooth
ASSISTANCE	5 levels of Support: Preset or editable by Mobile App

OTHER FUNCTIONS

Walking assistance, External light control, Light sensor, Brakimg light, Daytime Running Light, Speed/distance/power information, Battery information, Bluetooth for mobile App, USB power socket

NOTE	kickstand Ursus adjustable rear, bell, keyring

GREEN MATT	
49	0115328000

E-URBAN

CLUB

AM80 agile | AGILE CAN | 313WH | A15 LED | 20" | 7 S



FRAME	Alu 20", foldable, with integrated battery
FORK	Hi-Ten Tig 26"
HEADSET	Integrated 1"1/8, threaded, with cap
CRANKSET	AM80 alu 152mm, FSA 44T
REAR DERAILLEUR	Shimano Tourney RD-TY500
SHIFTERS LEVERS	Shimano Tourney SL-RS35 RevoShift, 7s
BRAKES	Shimano BR-MT200 hydraulic disc, Rotor 160 mm CL
CASSETTE	Shimano HG200 7s 12-32
PEDALS	Resin foldable
HUBS	Shimano TX505 32h, CL, quick release
RIMS	Rodi 20", double wall w/eylets, 32h, disc
STEM	Alu, foldable, adjustable
HANDLEBAR	Alu, 30mm rise
SEATPOST	Alu with clamp, 34,9mm, telescopic
SADDLE	Selle Royal Lancia
TYRES	Schwalbe Big Apple 20"x2,00", with reflecting line, puncture proof
MUDGUARDS	Single stay speedy
CHAINCOVER	Plastic, L type
CARRIERS	Alu rear carrier with spring
EXTERNAL LIGHTS	Axa front (15 lux) and rear LED, controlled by display

MOTOR	AM80 Agile CAN, 36V 250W
MAX TORQUE	80 Nm
SENSOR TYPE	Torque
BATTERY	Li-Ion 36V, 313Wh, inside down tube, with BMS
CHARGER TYPE	2A Europlug
CHARGE TIME	100%: 5h20m / 80%: 3h52m
MAX ASSISTED SPEED	25 km/h
DISPLAY	Atala A15 LED CAN, Power +/-
ASSISTANCE	5 levels of Support

OTHER FUNCTIONS

Walking assistance, External light control

NOTE	kickstand Ursus adjustable, bell, keyring Open size: L 163cm, H 117mm, W 59mm Folded size: L 82cm, H 78cm, W 48cm

ULTRALIGHT/NEON RED MATT	
33	0115289320

E-URBAN

DOMINO

AM80 easy | EASY | 504WH | A19 DIGIT LED | 24X3" | 7 S



FRAME	Alu. Hydroformed 24x3", easy access, semi-integrated battery, integrated carrier, internal cables
FORK	HL 866S 24", magnesium with alu crown, 60mm travel, 32mm stanchions, 110mm axle
HEADSET	FSA integrated ahead 1"1/8
CRANKSET	Alu 170mm, 38T
REAR DERAILLEUR	Shimano Tourney RD-TY500
SHIFTERS LEVERS	Shimano Tourney SL-RV400 RevoShift, 7s
BRAKES	Shimano BR-MT200 hydraulic disc, Rotor 180 mm INT
CASSETTE	Shimano HG200 7s 12-32
PEDALS	Resin antislip
HUBS	Alloy 36h, 110/142mm, Disc INT, quick release
RIMS	Alloy 24x3", double wall, 36h
STEM	Alu, ahead, adjustable
HANDLEBAR	Alu TKK, 630mm, rise 20mm
SEATPOST	Aalu with clamp, 30,9mm
SADDLE	Selle Royal Aurorae Vacum
TYRES	CST City 24"x3,00"
MUDGUARDS	Steel Single stay
CHAINCOVER	Plastic, L type
CARRIERS	Rear integrated with frame, 25kg load / Front alu on Head tube, 12kg load
EXTERNAL LIGHTS	Axa front (45 lux) and rear LED, controlled by display

MOTOR	AM80 Easy UART, 36V, mid motor
POWER	Rated: 250W, Max: 455W
MAX TORQUE	70 Nm
SENSOR TYPE	Torque
BATTERY	Phylion Li-Ion 36V, 504Wh, on frame, with Smart BMS UART, 2,70Kg
CHARGER TYPE	2A Europlug
CHARGE TIME	100%: 7h30m / 80%: 5h36m
MAX ASSISTED SPEED	25 km/h
DISPLAY	A19 Digit LED UART
ASSISTANCE	5 levels of Support: Preset: or editable by Mobile App

OTHER FUNCTIONS

Walking assistance, External light control, Speed/distance information, Battery %

NOTE	kickstand Ursus adjustable rear, bell, keyring

BLUE MATT	
45	0115328100

DESIRE 6.4 26”

AM80 easy | EASY | 418WH | A19 DIGIT LED | 26” | 7 S



FRAME	Alu. Hydroformed 26", easy access, integrated battery, internal cables
FORK	HL CH-187 26", alu with alu crown, 60mm travel, 30mm stanchions
HEADSET	FSA integrated ahead 1”1/8
CRANKSET	Alu 170mm, Miche 38T
REAR DERAILLEUR	Shimano Tourney RD-TY500
SHIFTERS LEVERS	Shimano Tourney SL-RS35 RevoShift, 7s
BRAKES	Shimano BR-MT200 hydraulic disc, Rotor 160 mm CL
CASSETTE	Shimano HG200 7s 12-32
PEDALS	Resin antislip
HUBS	Shimano TX505 32h, CL, quick release
RIMS	Rodi 26", double wall w/eylets, 32h, disc
STEM	Byte alu, ahead, adjustable
HANDLEBAR	Byte steel City, 600mm, rise 60mm
SEATPOST	Byte alu with clamp, 27,2mm
SADDLE	Selle Royal Aurorae
TYRES	Byte Garda 26”x1,75”, with reflecting line
MUDGUARDS	Single stay speedy, edge
CHAINCOVER	L type, edge
CARRIERS	Rear steel 10mm with spring, no bracket, 25kg load
EXTERNAL LIGHTS	Axa front (15 lux) and rear LED, controlled by display

MOTOR	AM80 Easy UART, 36V, mid motor
POWER	Rated: 250W, Max: 455W
MAX TORQUE	70 Nm
SENSOR TYPE	Torque
BATTERY	Phylion Li-Ion 36V, 504Wh, on frame, with Smart BMS UART, 2,70Kg
CHARGER TYPE	2A Europlug
CHARGE TIME	100%: 7h30m / 80%: 5h36m
MAX ASSISTED SPEED	25 km/h
DISPLAY	A19 Digit LED UART
ASSISTANCE	5 levels of Support: Preset: or editable by Mobile App

OTHER FUNCTIONS

Walking assistance, External light control, Speed/distance information, Battery %

NOTE	kickstand Ursus adjustable rear, bell, keyring

WHITE GLOSSY	
45	0115311700

E-URBAN

DEAL 5.4 26”

AM80 easy | EASY | 518WH | A19 DIGIT LED | 26” | 7 S



FRAME	Alu. 26", easy access, integrated HT, disc brake, internal cables
FORK	HL CH-187 26", alu with alu crown, 60mm travel, 30mm stanchions
HEADSET	FSA integrated ahead 1”1/8
CRANKSET	Alu 170mm, Miche 38T
REAR DERAILLEUR	Shimano Tourney RD-TY500
SHIFTERS LEVERS	Shimano Tourney SL-RS35 RevoShift, 7s
BRAKES	Shimano BR-MT200 hydraulic disc, Rotor 160 mm CL
CASSETTE	Shimano HG200 7s 12-32
PEDALS	Resin antislip
HUBS	Shimano TX505 32h, CL, quick release
RIMS	Rodi 26", double wall w/eylets, 32h, disc
STEM	Byte alu, ahead, adjustable
HANDLEBAR	Byte steel City, 600mm, rise 60mm
SEATPOST	Byte alu with clamp, 27,2mm
SADDLE	Selle Royal Wave
TYRES	Byte Garda 26”x1,75”
MUDGUARDS	Single stay speedy
CHAINCOVER	L type, edge
CARRIERS	Battery rear carrier with spring, 25kg - Front carrier by tube
EXTERNAL LIGHTS	Axa front (15 lux) and rear LED on battery, controlled by display

MOTOR	AM80 Easy UART, 36V, mid motor
POWER	Rated: 250W, Max: 455W
MAX TORQUE	70 Nm
SENSOR TYPE	Torque
BATTERY	Phylion Li-Ion 36V, 504Wh, on frame, with Smart BMS UART, 2,70Kg
CHARGER TYPE	2A Europlug
CHARGE TIME	100%: 7h30m / 80%: 5h36m
MAX ASSISTED SPEED	25 km/h
DISPLAY	A19 Digit LED UART
ASSISTANCE	5 levels of Support

OTHER FUNCTIONS

Walking assistance, External light control, Speed/distance information, Battery %

NOTE	kickstand Ursus adjustable rear, bell, keyring

ANTHACITE MATT

45	0115311800

TASER

ecoTronic | 50Nm | 600WH | A23 LCD BT | 24X2,40" | 7 S



FRAME	Alu. 24", easy access, internal battery, internal cables
FORK	HL CH-187D 26", alu with alu crown, 60mm travel, 30mm stanchions
HEADSET	FSA integrated 1"1/8
CRANKSET	Alu 170mm, 42T Direct mount, 73mm cartridge
REAR DERAILLEUR	Shimano Altus RD-M310
SHIFTERS LEVERS	Shimano SL-M315 PushPull, 7s
BRAKES	Shimano BR-MT200 hydraulic disc, Rotor 180mm INT
PEDALS	Resin Freeride
HUBS	Alu quick release front, motor on rear, 36h, INT
RIMS	Radiale E25 24", double wall, 36h, disc
STEM	Alu over, ahead
HANDLEBAR	Alu over CITY 680mm, rise 100mm
SEATPOST	Alu with clamp, 30,9mm
SADDLE	Selle Royal Vivo Vacum
TYRES	CST 24"x2,40" Trail
MUDGUARDS	Steel painted
CHAINCOVER	Plastic, L type
CARRIERS	Rear alu 14mm with spring, 25kg load
EXTERNAL LIGHTS	Axa front (45 lux) with DRL and rear LED

MOTOR	Ananda brushless 36V, on rear hub
POWER	Rated: 250W, Max: 480W
MAX TORQUE	50 Nm
SENSOR TYPE	Torque
BATTERY	Li-Ion 36V, 600Wh, inside frame, with Smart BMS CAN, 2,8Kg
CHARGER TYPE	2A Europlug
CHARGE TIME	100%: 9h12 / 80%: 6h57m
MAX ASSISTED SPEED	25km/h
DISPLAY	A23 LCD CAN, Bluetooth
ASSISTANCE	Dual Mode "Drive" --> 5 levels of Support "Cruise" --> 5 levels of Speed/Torque

OTHER FUNCTIONS

Walking assistance, External light control, Daytime Running Light, Speed/ distance/power information, Battery % and range, Bluetooth for mobile App

NOTE	kickstand Ursus adjustable rear, bell, keyring

ANTHRACITE MATT

45	0115322100

T-SPACE 8.5 28”

ecoTronic | 55Nm | 600WH | A16 TFT COLOUR REMOTE BT | 28” | 8 S



FRAME	Alu. 700c, easy access, internal battery, internal cables
FORK	HL CH-187D 700c, alu with alu crown, 65mm travel, 30mm stanchions
HEADSET	FSA integrated 1”1/8
CRANKSET	Alu 170mm, 42T Direct mount, 73mm cartridge
REAR DERAILLEUR	Shimano Altus RD-M310
SHIFTERS LEVERS	Shimano Tourney SL-RV400 RevoShift, 8s
BRAKES	Shimano BR-MT200 hydraulic disc, Rotor 160mm INT
FREEWHEEL	Falcon 8s 13-32T
PEDALS	Resin antislip
HUBS	Alu quick release front, motor on rear, 36h, INT
RIMS	Radiale E25 700c, double wall, 36h, disc
STEM	Au over, ahead, adjustable
HANDLEBAR	Alu over TKK, 640mm, rise 25mm
SEATPOST	Alu with clamp, 27,2mm
SADDLE	Selle Royal Vacum
TYRES	Schwalbe Energizer Active Plus 700x50c, with reflecting line, puncture proof
MUDGUARDS	PLS58 Single stay
CHAINCOVER	Plastic, L type
CARRIERS	Rear alu 14mm with spring, 25kg load, Front alu on Head tube, 12kg load
EXTERNAL LIGHTS	Axa front (45 lux) with DRL and twilight sensor and rear LED

MOTOR	Ananda brushless 36V, on rear hub
POWER	Rated: 250W, Max: 410W
MAX TORQUE	55 Nm
SENSOR TYPE	Torque
BATTERY	Li-Ion 36V, 600Wh, inside frame, with Smart BMS CAN, 2,72Kg
CHARGER TYPE	2A Europlug
CHARGE TIME	100%: 9h12 / 80%: 6h57m
MAX ASSISTED SPEED	25km/h
DISPLAY	A16 TFT Colour CAN, with remote control, USB and Bluetooth
ASSISTANCE	Dual Mode: “Drive” --> 5 levels of Support “Cruise” --> 5 levels of Speed/Torque

OTHER FUNCTIONS

Walking assistance, External light control, Light sensor, Daytime Running Light, Speed/distance/power information, Battery information, Bluetooth for mobile App, USB power socket

NOTE	kickstand Ursus adjustable, bell

DARK BLUE MATT	
43	0115316450

E-SPACE 8.4 28”

ecologic | 45Nm | 540WH | A10 LCD REMOTE | 28” | 8 S





FRAME	Alu. 700c, easy access, integrated battery, integrated HT, disc brake, internal cables
FORK	Suntour NEX 700c, alu with alu crown, 63mm
HEADSET	FSA integrated 1”1/8
CRANKSET	Byte alu 42T cartridge
REAR DERAILLEUR	Shimano Altus RD-M310
SHIFTERS LEVERS	Shimano Tourney SL-RS45 RevoShift, 8s
BRAKES	Hydraulic disk, Rotor 160 mm, with brake lever switch
FREEWHEEL	DNP 8s 13-28
PEDALS	Resin antislip
HUBS	Shimano quick release front, motor on rear, 36h, INT
RIMS	Beretta 700c, double wall w/eylets, 36h, disc
STEM	Byte alu over, ahead, adjustable
HANDLEBAR	Byte alu over CITY 610mm, rise 25mm
SEATPOST	Byte alu with clamp, 27,2mm
SADDLE	Selle Royal Aurorae w/elastomer
TYRES	Byte Trento 700x45c, with reflecting line
MUDGUARDS	Single stay speedy
CHAINCOVER	Plastic, L type
CARRIERS	Rear alu 14mm with spring, 25kg load
EXTERNAL LIGHTS	Axa front (15 lux) and rear LED, controlled by display and twilight sensor

MOTOR	Ananda brushless 36V 250W, on rear hub
MAX TORQUE	45 Nm
SENSOR TYPE	Cadence, w/12 pulses
BATTERY	Li-Ion 36V, 540Wh, inside the frame, Samsung cells with Smart BMS CAN
CHARGER TYPE	2A Europlug
CHARGE TIME	100%: 8h50 / 80%: 6h40m
MAX ASSISTED SPEED	25km/h
DISPLAY	Atala A10 LCD Smart CAN, with remote control
ASSISTANCE	5 levels, Speed/Torque

OTHER FUNCTIONS
Walking assistance, External light control, Speed information, Battery info

NOTE	kickstand Ursus adjustable, bell

	BLUE/WHITE MATT
45	0115314750
	BLUE/GRAY MATT
45	0115314700

E-SPACE 7.5 26”

ecologic | 55Nm | 540WH | A19 DIGIT LED | 26” | 7 S



FRAME	Alu. 26", easy access, internat battery, internal cables
FORK	HL CH-187D 26", alu with alu crown, 60mm travel, 30mm stanchions
HEADSET	FSA integrated 1”1/8
CRANKSET	Byte alu 42T, 73mm cartridge
REAR DERAILLEUR	Shimano Tourney RD-TY500
SHIFTERS LEVERS	Shimano Tourney SL-RV400 RevoShift, 7s
BRAKES	Hydraulic disk, Rotor 160mm INT, with brake lever switch
FREEWHEEL	Shimano Tourney 7s 14-28T
PEDALS	Resin antislip
HUBS	Alu quick release front, motor on rear, 36h, INT
RIMS	Radiale E25 26", double wall, 36h, disc
STEM	Alu, ahead, adjustable
HANDLEBAR	Steel City, 600mm, rise 60mm
SEATPOST	Alu with clamp, 27,2mm
SADDLE	Selle Royal Wave Vacum
TYRES	Byte Garda 26”x2,10”
MUDGUARDS	SKS A65 Single stay
CHAINCOVER	Steel painted, L type
CARRIERS	Rear steel 12mm with spring, 25kg load, Front by tube, 5kg load
EXTERNAL LIGHTS	Axa front (15) lux and rear LED, with bracking light

MOTOR	Ananda brushless 36V, on rear hub
POWER	Rated: 250W, Max: 410W
MAX TORQUE	55 Nm
SENSOR TYPE	Cadence, w/12 pulses
BATTERY	Li-Ion 36V, 540Wh, inside frame, with Smart BMS CAN, 2,7Kg
CHARGER TYPE	2A Europlug
CHARGE TIME	100%: 8h / 80%: 6h
MAX ASSISTED SPEED	25km/h
DISPLAY	A19 Digit LED CAN
ASSISTANCE	5 levels of Speed/Torque

OTHER FUNCTIONS
Walking assistance, External light control, Speed/distance information, Battery %

NOTE	kickstand Ursus adjustable, bell, wheel reflectors

ULTRALIGHT	
43	0115316500

E-SPIKE 8.4 MAN

ecologic | 45Nm | 540WH | A10 LCD REMOTE | 28" | 8 S



FRAME	Alu. 700c, integrated battery, integrated HT, disc brake, internal cables
FORK	Suntour NEX 700c, alu with alu crown, 50mm
HEADSET	FSA integrated 1"1/8
CRANKSET	Byte alu 42T cartridge
REAR DERAILLEUR	Shimano Altus RD-M310
SHIFTERS LEVERS	Shimano SL-M315 PushPull, 8s
BRAKES	Hydraulic disk, Rotor 160 mm, with brake lever switch
FREEWHEEL	DNP 8s 13-28
PEDALS	Resin antislip
HUBS	Shimano quick release front, motor on rear, 36h, INT
RIMS	Beretta 700c, double wall w/eylets, 36h, disc
STEM	Byte alu over, ahead, adjustable
HANDLEBAR	Byte alu over TKK, 640mm, rise 25mm
SEATPOST	Byte alu with clamp, 27,2mm
SADDLE	Selle Royal Lancia
TYRES	Byte Trento 700x45c, with reflecting line
MUDGUARDS	Single stay speedy
CHAINCOVER	Plastic, L type
CARRIERS	Rear alu 14mm with spring, 25kg load
EXTERNAL LIGHTS	Axa front (15 lux) and rear LED, controlled by display and twilight sensor

MOTOR	Ananda brushless 36V 250W, on rear hub
MAX TORQUE	45 Nm
SENSOR TYPE	Cadence, w/12 pulses
BATTERY	Li-Ion 36V, 540Wh, inside the frame, Samsung cells with Smart BMS CAN
CHARGER TYPE	2A Europlug
CHARGE TIME	100%: 8h50 / 80%: 6h40m
MAX ASSISTED SPEED	25km/h
DISPLAY	Atala A10 LCD Smart CAN, with remote control
ASSISTANCE	5 levels, Speed/Torque

OTHER FUNCTIONS

Walking assistance, External light control, Speed information, Battery information

NOTE	kickstand Ursus adjustable, bell

BLACK/ULTRALIGHT MATT	
49	0115314650

E-SPIKE 8.4 LADY

ecologic | 45Nm | 540WH | A10 LCD REMOTE | 28" | 8 S



FRAME	Alu. 700c, integrated battery, integrated HT, disc brake, internal cables
FORK	Suntour NEX 700c, alu with alu crown, 50mm
HEADSET	FSA integrated 1"1/8
CRANKSET	Byte alu 42T cartridge
REAR DERAILLEUR	Shimano Altus RD-M310
SHIFTERS LEVERS	Shimano SL-M315 PushPull, 8s
BRAKES	Hydraulic disk, Rotor 160 mm, with brake lever switch
FREEWHEEL	DNP 8s 13-28
PEDALS	Resin antislip
HUBS	Shimano quick release front, motor on rear, 36h, INT
RIMS	Beretta 700c, double wall w/eylets, 36h, disc
STEM	Byte alu over, ahead, adjustable
HANDLEBAR	Byte alu over TKK, 640mm, rise 25mm
SEATPOST	Byte alu with clamp, 27,2mm
SADDLE	Selle Royal Lancia
TYRES	Byte Trento 700x45c, with reflecting line
MUDGUARDS	Single stay speedy
CHAINCOVER	Plastic, L type
CARRIERS	Rear alu 14mm with spring, 25kg load
EXTERNAL LIGHTS	Axa front (15 lux) and rear LED, controlled by display and twilight sensor

MOTOR	Ananda brushless 36V 250W, on rear hub
MAX TORQUE	45 Nm
SENSOR TYPE	Cadence, w/12 pulses
BATTERY	Li-Ion 36V, 540Wh, inside the frame, Samsung cells with Smart BMS CAN
CHARGER TYPE	2A Europlug
CHARGE TIME	100%: 8h50 / 80%: 6h40m
MAX ASSISTED SPEED	25km/h
DISPLAY	Atala A10 LCD Smart CAN, with remote control
ASSISTANCE	5 levels, Speed/Torque

OTHER FUNCTIONS

Walking assistance, External light control, Speed information, Battery information

NOTE	kickstand Ursus adjustable, bell

FLAT GRAY/BLUE NAVY MATT	
45	0115314600

E-SPIKE 7.5 MAN

ecologic | 55Nm | 540WH | A19 DIGIT LED | 28" | 7 S



FRAME	Alu 700c, internal battery, internal cables
FORK	HL CH-187D 700c, alu with alu crown, 65mm travel, 30mm stanchions
HEADSET	FSA integrated 1"1/8
CRANKSET	Byte alu 42T, 73mm cartridge
REAR DERAILLEUR	Shimano Tourney RD-TY500
SHIFTERS LEVERS	Shimano SL-M315 PushPull, 7s
BRAKES	Hydraulic disk, Rotor 160mm INT, with brake lever switch
FREEWHEEL	Shimano Tourney 7s 14-28T
PEDALS	Resin antislip
HUBS	Alu quick release front, motor on rear, 36h, INT
RIMS	Radiale E25 700c, double wall, 36h, disc
STEM	Alu, ahead, adjustable
HANDLEBAR	Steel TKK, 600mm, rise 50mm
SEATPOST	Alu with clamp, 27,2mm
SADDLE	Selle Royal Wave Vacum
TYRES	Byte Trento 700x45c
MUDGUARDS	PLS58 Single stay
CHAINCOVER	Plastic, L type
CARRIERS	Rear steel 12mm with spring, 25kg load
EXTERNAL LIGHTS	Axa front (15) lux and rear LED, with bracking light

MOTOR	Ananda brushless 36V, on rear hub
POWER	Rated: 250W, Max: 410W
MAX TORQUE	55 Nm
SENSOR TYPE	Cadence, w/12 pulses
BATTERY	Li-Ion 36V, 540Wh, inside frame, with Smart BMS CAN, 2,7Kg
CHARGER TYPE	2A Europlug
CHARGE TIME	100%: 8h / 80%: 6h
MAX ASSISTED SPEED	25km/h
DISPLAY	A19 Digit LED CAN
ASSISTANCE	5 levels of Speed/Torque

OTHER FUNCTIONS
Walking assistance, External light control, Speed information, Battery %

NOTE	kickstand Ursus adjustable, bell

ULTRALIGHT/RED	
49	0115316200


Venus

E-RUN 8.1 HD 26” LADY

ecologic | 35Nm | 518WH | A15 LED | 26” | 7 S



FRAME	Alu. 26”, easy access, integrated HT, disc brake, internal cables
FORK	HL CH-187 26”, alu with alu crown, 40mm
HEADSET	FSA integrated 1”1/8
CRANKSET	Byte alu 42T cartridge
REAR DERAILLEUR	Shimano Tourney RD-TY500
SHIFTERS LEVERS	Shimano SL-M315 PushPull, 7s
BRAKES	Hydraulic disk, Rotor 160 mm, with brake lever switch
FREEWHEEL	Shimano Tourney 7s 14-28
PEDALS	Resin antislip
HUBS	Shimano quick release front, motor on rear, 36h, INT
RIMS	Beretta 26”, double wall w/eylets, 36h, disc
STEM	Byte alu, adjustable
HANDLEBAR	Byte steel City
SEATPOST	Byte alu with clamp, 27,2mm
SADDLE	Selle Royal Wave
TYRES	Byte Garda 26”x1,75”
MUDGUARDS	Single stay speedy
CHAINCOVER	Plastic, L type
CARRIERS	Battery rear carrier with spring, 25kg
EXTERNAL LIGHTS	Axa front (15 lux) and rear LED on battery, controlled by display

MOTOR	Ananda brushless 36V 250W, on rear hub
MAX TORQUE	35 Nm
SENSOR TYPE	Cadence, w/12 pulses
BATTERY	Phylion Li-Ion 36V, 518Wh, under carrier, with Smart BMS, integrated rear light
CHARGER TYPE	2A Europlug
CHARGE TIME	100%: 7h30m / 80%: 5h40m
MAX ASSISTED SPEED	25km/h
DISPLAY	Atala A15 LED UART, Power +/-
ASSISTANCE	5 levels, Speed/Torque

OTHER FUNCTIONS

Walking assistance, External light control

NOTE	kickstand Ursus adjustable, bell

BLACK/GREEN MATT

45	0115300800

E-RUN 7.1 FS 28" MAN

ecologic | 35Nm | 518WH | A15 LED | 28" | 7 S



FRAME	Alu. 700c, internal cables
FORK	HL CH-187 700c, alu with alu crown, 40mm
HEADSET	Steel 1"1/8, threaded, with cap
CRANKSET	Byte steel 42T cartridge, with cap
REAR DERAILLEUR	Shimano Tourney RD-TY300
SHIFTERS LEVERS	Shimano Tourney SL-RS35 RevoShift, 7s
BRAKES	Promax alu, V-Brake, with brake lever switch
FREEWHEEL	Shimano Tourney 7s 14-28
PEDALS	Resin City
HUBS	Alu 36h, Shimano front, motor on rear
RIMS	Beretta 700c alu, double wall w/eylets, 36h
STEM	Byte alu, adjustable
HANDLEBAR	Byte steel TKK
SEATPOST	Byte alu with clamp, 27,2mm
SADDLE	Selle Royal Wave
TYRES	Byte Trento 700x45c
MUDGUARDS	Single stay speedy
CHAINCOVER	Steel painted, L type
CARRIERS	Battery rear carrier with spring, 25kg
EXTERNAL LIGHTS	Axa front (15 lux) and rear LED on battery, controlled by display

MOTOR	Ananda brushless 36V 250W, on rear hub
MAX TORQUE	35 Nm
SENSOR TYPE	Cadence, w/12 pulses
BATTERY	Phylion Li-Ion 36V, 518Wh, under carrier, with Smart BMS, integrated rear light
CHARGER TYPE	2A Europlug
CHARGE TIME	100%: 7h30m / 80%: 5h40m
MAX ASSISTED SPEED	25km/h
DISPLAY	Atala A15 LED UART, Power +/-
ASSISTANCE	5 levels, Speed/Torque

OTHER FUNCTIONS

Walking assistance, External light control

NOTE kickstand Ursus adjustable, bell

BLACK/RED MATT

49	0115300900

E-RUN 7.1 28” MAN

ecologic | 35Nm | 518WH | A15 LED | 28” | 7 S



FRAME	Alu. 700c, internal cables
FORK	Hi-Ten Tig 700c
HEADSET	Steel 1”1/8, threaded, with cap
CRANKSET	Byte steel 42T cartridge, with cap
REAR DERAILLEUR	Shimano Tourney RD-TY300 / L-TWOO RD-V4007-M-2, 7
SHIFTERS LEVERS	Shimano Tourney SL-RS35 RevoShift, 7s / L-TWOO SL-V4007-7W-2, 7s
BRAKES	Promax alu, V-Brake, with brake lever switch
FREEWHEEL	Shimano Tourney 7s 14-28 / L-TWOO FW-207 7s 13-28
PEDALS	Resin City
HUBS	Alu 36h, Shimano front, motor on rear
RIMS	Beretta 700c, double wall w/eylets, 36h
STEM	Byte alu, adjustable
HANDLEBAR	Byte steel TKK
SEATPOST	Byte alu with clamp, 27,2mm
SADDLE	Selle Royal Wave
TYRES	Byte Trento 700x45c
MUDGUARDS	Single stay speedy
CHAINCOVER	Steel painted, L type
CARRIERS	Battery rear carrier with spring, 25kg
EXTERNAL LIGHTS	Axa front (15 lux) and rear LED on battery, controlled by display

MOTOR	Ananda brushless 36V 250W, on rear hub
MAX TORQUE	35 Nm
SENSOR TYPE	Cadence, w/12 pulses
BATTERY	Phylion Li-Ion 36V, 518Wh, under carrier, with Smart BMS, integrated rear light
CHARGER TYPE	2A Europlug
CHARGE TIME	100%: 7h30m / 80%: 5h40m
MAX ASSISTED SPEED	25km/h
DISPLAY	Atala A15 LED UART, Power +/-
ASSISTANCE	5 levels, Speed/Torque

OTHER FUNCTIONS

Walking assistance, External light control

NOTE kickstand Ursus adjustable, bell

ANTHRACITE GREEN MATT VERSION LT	
49	0115301305
ANTHRACITE GREEN MATT VERSION SHIMANO	
49	0115301300

E-RUN 7.1 28” LADY

ecologic | 35Nm | 518WH | A15 LED | 28” | 7 S



FRAME	Alu. 700c, internal cables
FORK	Hi-Ten Tig 700c
HEADSET	Steel 1”1/8, threaded, with cap
CRANKSET	Byte steel 42T cartridge, with cap
REAR DERAILLEUR	Shimano Tourney RD-TY300
SHIFTERS LEVERS	Shimano Tourney SL-RS35 RevoShift, 7s
BRAKES	Promax alu, V-Brake, with brake lever switch
FREEWHEEL	Shimano Tourney 7s 14-28
PEDALS	Resin City
HUBS	Alu 36h, Shimano front, motor on rear
RIMS	Beretta 700c, double wall w/eylets, 36h
STEM	Byte alu, adjustable
HANDLEBAR	Byte steel TKK
SEATPOST	Byte alu with clamp, 27,2mm
SADDLE	Selle Royal Wave
TYRES	Byte Trento 700x45c
MUDGUARDS	Single stay speedy
CHAINCOVER	Steel painted, L type
CARRIERS	Battery rear carrier with spring, 25kg
EXTERNAL LIGHTS	Axa front (15 lux) and rear LED on battery, controlled by display

MOTOR	Ananda brushless 36V 250W, on rear hub
MAX TORQUE	35 Nm
SENSOR TYPE	Cadence, w/12 pulses
BATTERY	Phylion Li-Ion 36V, 518Wh, under carrier, with Smart BMS, integrated rear light
CHARGER TYPE	2A Europlug
CHARGE TIME	100%: 7h30m / 80%: 5h40m
MAX ASSISTED SPEED	25km/h
DISPLAY	Atala A15 LED UART, Power +/-
ASSISTANCE	5 levels, Speed/Torque

OTHER FUNCTIONS

Walking assistance, External light control

NOTE kickstand Ursus adjustable, bell

WHITE/RED MATT

45	0115301500

E-RUN 7.1 26” LADY

ecologic | 35Nm | 518WH | A15 LED | 26” | 7 S



FRAME	Alu. 26", easy access, internal cables
FORK	Hi-Ten Tig 26”
HEADSET	Steel 1”1/8, threaded, with cap
CRANKSET	Byte steel 42T cartridge, with cap
REAR DERAILLEUR	Shimano Tourney RD-TY300
SHIFTERS LEVERS	Shimano Tourney SL-RS35 RevoShift, 7s
BRAKES	Promax alu, V-Brake, with brake lever switch
FREEWHEEL	Shimano Tourney 7s 14-28
PEDALS	Resin City
HUBS	Alu 36h, Shimano front, motor on rear
RIMS	Beretta 26" alu, double wall w/eylets, 36h
STEM	Byte alu, adjustable
HANDLEBAR	Byte steel City
SEATPOST	Byte alu with clamp, 27,2mm
SADDLE	Selle Royal Wave
TYRES	Byte Garda 26”x1,75”
MUDGUARDS	Single stay speedy
CHAINCOVER	Steel painted, L type
CARRIERS	Battery rear carrier with spring, 25kg / front carrier
EXTERNAL LIGHTS	Axa front (15 lux) and rear LED on battery, controlled by display

MOTOR	Ananda brushless 36V 250W, on rear hub
MAX TORQUE	35 Nm
SENSOR TYPE	Cadence, w/12 pulses
BATTERY	Phylion Li-Ion 36V, 518Wh, under carrier, with Smart BMS, integrated rear light
CHARGER TYPE	2A Europlug
CHARGE TIME	100%: 7h30m / 80%: 5h40m
MAX ASSISTED SPEED	25km/h
DISPLAY	Atala A15 LED UART, Power +/-
ASSISTANCE	5 levels, Speed/Torque

OTHER FUNCTIONS

Walking assistance, External light control

NOTE kickstand Ursus adjustable, bell

ULTRALIGHT/ANTHRACITE

45	0115301400

E-RUN 6.1 26” LADY

ecologic | 35Nm | 360WH | A15 LED | 26” | 7 S



FRAME	Alu. 26", easy access, internal cables
FORK	Hi-Ten Tig 26”
HEADSET	Steel 1”1/8, threaded, with cap
CRANKSET	Byte steel 42T cartridge, with cap
REAR DERAILLEUR	Shimano Tourney RD-TY300
SHIFTERS LEVERS	Shimano Tourney SL-RS35 RevoShift, 7s
BRAKES	Promax alu, V-Brake, with brake lever switch
FREEWHEEL	Shimano Tourney 7s 14-28
PEDALS	Resin City
HUBS	Alu 36h, Shimano front, motor on rear
RIMS	Beretta 26" alu, double wall w/eylets, 36h
STEM	Byte alu, adjustable
HANDLEBAR	Byte steel City
SEATPOST	Byte alu with clamp, 27,2mm
SADDLE	Selle Royal Wave
TYRES	Byte Garda 26”x1,75”
MUDGUARDS	Single stay speedy
CHAINCOVER	Steel painted, L type
CARRIERS	Battery rear carrier, 25kg / front carrier
EXTERNAL LIGHTS	Axa front (15 lux) and rear LED on battery, controlled by display

MOTOR	Ananda brushless 36V 250W, on rear hub
MAX TORQUE	35Nm
SENSOR TYPE	Cadence, w/12 pulses
BATTERY	Li-Ion 36V, 360Wh, under carrier, with BMS, integrated rear light
CHARGER TYPE	2A Europlug
CHARGE TIME	100%: 5h15m / 80%: 4h
MAX ASSISTED SPEED	25km/h
DISPLAY	Atala A15 LED UART, Power +/-
ASSISTANCE	5 levels, Speed/Torque

OTHER FUNCTIONS

Walking assistance, External light control

NOTE	kickstand Ursus adjustable, bell

BLUE/CHAMPAGNE MATT	
45	0115301600
WHITE/RED	
45	0115301650

E-RUN 6.1 FS 28" MAN

ecologic | 35Nm | 360WH | A15 LED | 28" | 7 S



FRAME	Alu. 700c, internal cables
FORK	Hi-Ten Tig 700c
HEADSET	Steel 1"1/8, threaded, with cap
CRANKSET	Byte steel 42T cartridge, with cap
REAR DERAILLEUR	Shimano Tourney RD-TY300
SHIFTERS LEVERS	Shimano Tourney SL-RS35 RevoShift, 7s
BRAKES	Promax alu, V-Brake, with brake lever switch
FREEWHEEL	Shimano Tourney 7s 14-28
PEDALS	Resin City
HUBS	Alu 36h, Shimano front, motor on rear
RIMS	Beretta 700c alu, double wall w/eylets, 36h
STEM	Byte alu, adjustable
HANDLEBAR	Byte steel City
SEATPOST	Byte alu with clamp, 27,2mm
SADDLE	Selle Royal Wave
TYRES	Byte Trento 700x45c
MUDGUARDS	Single stay speedy
CHAINCOVER	Steel painted, L type
CARRIERS	Battery rear carrier, 25kg / front carrier
EXTERNAL LIGHTS	Axa front (15 lux) and rear LED on battery, controlled by display

MOTOR	Ananda brushless 36V 250W, on rear hub
MAX TORQUE	35Nm
SENSOR TYPE	Cadence, w/12 pulses
BATTERY	Li-Ion 36V, 360Wh, under carrier, with BMS, integrated rear light
CHARGER TYPE	2A Europlug
CHARGE TIME	100%: 5h15m / 80%: 4h
MAX ASSISTED SPEED	25km/h
DISPLAY	Atala A15 LED UART, Power +/-
ASSISTANCE	5 levels, Speed/Torque

OTHER FUNCTIONS

Walking assistance, External light control

NOTE	kickstand Ursus adjustable, bell

BLACK/RED MATT

49	0115301100

E-RUN 6.1 FS 26” LADY

ecologic | 35Nm | 360WH | A15 LED | 26” | 7 S



FRAME	Alu. 26", easy access, internal cables
FORK	HL CH-187 26", alu with alu crown, 40mm
HEADSET	Steel 1”1/8, threaded, with cap
CRANKSET	Byte steel 42T cartridge, with cap
REAR DERAILLEUR	Shimano Tourney RD-TY300
SHIFTERS LEVERS	Shimano Tourney SL-RS35 RevoShift, 7s
BRAKES	Promax alu, V-Brake, with brake lever switch
FREEWHEEL	Shimano Tourney 7s 14-28
PEDALS	Resin City
HUBS	Alu 36h, Shimano front, motor on rear
RIMS	Beretta 26" alu, double wall w/eylets, 36h
STEM	Byte alu, adjustable
HANDLEBAR	Byte steel City
SEATPOST	Byte alu with clamp, 27,2mm
SADDLE	Selle Royal Wave
TYRES	Byte Garda 26”x1,75”
MUDGUARDS	Single stay speedy
CHAINCOVER	Steel painted, L type
CARRIERS	Battery rear carrier, 25kg / front carrier
EXTERNAL LIGHTS	Axa front (15 lux) and rear LED on battery, controlled by display

MOTOR	Ananda brushless 36V 250W, on rear hub
MAX TORQUE	35Nm
SENSOR TYPE	Cadence, w/12 pulses
BATTERY	Li-Ion 36V, 360Wh, under carrier, with BMS, integrated rear light
CHARGER TYPE	2A Europlug
CHARGE TIME	100%: 5h15m / 80%: 4h
MAX ASSISTED SPEED	25km/h
DISPLAY	Atala A15 LED UART, Power +/-
ASSISTANCE	5 levels, Speed/Torque

OTHER FUNCTIONS
Walking assistance, External light control

NOTE	kickstand Ursus adjustable, bell

ULTRALIGHT/ANTHRACITE	
45	0115301200

E-ROCK

ecologic | 55Nm | 627WH | A23 LCD BT | 20X4" | 7 S



FRAME	Alu. 20" FAT, easy access, integrated carrier, internal cables
FORK	HL 458A 20" Fat, alu crown, 30mm stanchions,135mm axle
HEADSET	FSA integrated 1"1/8
CRANKSET	Byte steel 42T, 120mm cartridge
REAR DERAILLEUR	Shimano Tourney RD-FT35D
SHIFTERS LEVERS	Shimano Tourney SL-RV400 RevoShift, 7s
BRAKES	Hydraulic disk, Rotor 160 mm, with brake lever switch
FREEWHEEL	Shimano Tourney 7s 14-28
PEDALS	Resin BMX
WHEELS	Alu monowheel 20" Fat, axle 135 F/175 R, motor on rear
STEM	Alu BMX
HANDLEBAR	BMX steel, 680mm, rise 170mm
SEATPOST	Alul with clamp, 27,2mm
SADDLE	Selle Royal Wave Vacum
TYRES	Fat City 20"x4"
MUDGUARDS	Steel painted
CHAINCOVER	Plastic, L type
CARRIERS	Rear integrated on the frame, 25kg load, Front alu on Head tube, 12kg load
EXTERNAL LIGHTS	Axa front (15 lux) and rear LED on battery, controlled by display

MOTOR	Ananda brushless 48V, on rear hub
POWER	Rated: 250W, Max: 555W
MAX TORQUE	55 Nm
SENSOR TYPE	Cadence, w/12 pulses
BATTERY	Li-Ion 36V, 627Wh, with Smart BMS CAN, 3,10Kg
CHARGER TYPE	2A Europlug
CHARGE TIME	100%: 7h12m / 80%: 5h35m
MAX ASSISTED SPEED	25km/h
DISPLAY	A23 LCD CAN, Bluetooth
ASSISTANCE	5 levels of Speed/Torque

OTHER FUNCTIONS

Walking assistance, External light control, Brakimg light, Speed/distance/power information, Battery % and range, Bluetooth for mobile App

BLACK YELLOW MATT	
43	0115319005
DARK RED MATT	
43	0115319010

EXTRAFOLDING 7.2

ecologic | BAFANG | 630WH | KD-21C LCD | 20X4" | 7 S



FRAME	Alu 20" FAT, foldable, integrated battery, integrated HT, disc brake, internal cables
FORK	HL CH-879 20" Fat, alu with alu crown, 32mm, with hydraulic lockout, 80mm
HEADSET	FSA integrated 1"1/8
CRANKSET	Alu 170mm, 42T, cartridge
REAR DERAILLEUR	Shimano Tourney RD-FT35D
SHIFTERS LEVERS	Shimano Tourney SL-RS35 RevoShift, 7s
BRAKES	Hydraulic disk, Rotor 180 mm, with brake lever switch
FREEWHEEL	Shimano Tourney 7s 14-28
PEDALS	Resin foldable
HUBS	Alu 36h, axle 135 F/175 R, motor on rear
RIMS	20" alu, double wall, 36h
STEM	Alu, foldable, adjustable
HANDLEBAR	Alu, 20mm rise
SEATPOST	Alu with clamp, 33,9mm
SADDLE	Selle Royal Wave
TYRES	Fat City 20"x4"
MUDGUARDS	Steel painted
CHAINCOVER	Bash guard
CARRIERS	Alu rear carrier custom, 25kg
EXTERNAL LIGHTS	Spanninga front (19Lux) and rear LED 36V, controlled by display

MOTOR	Bafang brushless 36V 250W, on rear hub
SENSOR TYPE	Cadence, w/12 pulses
BATTERY	Li-Ion 36V, 630Wh, inside the frame, Samsung cells with BMS
CHARGER TYPE	2A Europlug
CHARGE TIME	100%: 10h14m / 80%: 7h47m
MAX ASSISTED SPEED	25km/h
DISPLAY	KD-21C LCD, Power +/-
ASSISTANCE	5 levels, Speed/Torque

OTHER FUNCTIONS
kickstand Ursus adjustable, bell, wheel reflectors

NOTE	kickstand Ursus adjustable, bell

BLACK/ORANGE MATT	
43	0115301755

EXTRAFOLDING 7.1

ecologic | BAFANG | 630WH | KD-21C LCD | 20X4" | 7 S



FRAME	Alu 20" FAT, foldable, integrated battery, integrated HT, disc brake, internal cables
FORK	Susp 45mm 20"x4", alu crown, whith mechanical lockout
HEADSET	FSA integrated 1"1/8
CRANKSET	Alu 170mm, 42T, cartridge
REAR DERAILLEUR	Shimano Tourney RD-FT35D
SHIFTERS LEVERS	Shimano Tourney SL-RS35 RevoShift, 7s
BRAKES	Hydraulic disk, Rotor 180 mm, with brake lever switch
FREEWHEEL	Shimano Tourney 7s 14-28
PEDALS	Resin foldable
HUBS	Alu 36h, axle 135 F/175 R, motor on rear
RIMS	20" alu, double wall, 36h
STEM	Alu, foldable, adjustable
HANDLEBAR	Alu, 20mm rise
SEATPOST	Alu with clamp, 33,9mm
SADDLE	Selle Royal Wave
TYRES	Fat City 20"x4"
MUDGUARDS	Steel painted
CHAINCOVER	Bash guard
CARRIERS	Alu rear carrier custom, 25kg
EXTERNAL LIGHTS	Spanninga front (19Lux) and rear LED 36V, controlled by display

MOTOR	Bafang brushless 36V 250W, on rear hub
SENSOR TYPE	Cadence, w/12 pulses
BATTERY	Li-Ion 36V, 630Wh, inside the frame, Samsung cells with BMS
CHARGER TYPE	2A Europlug
CHARGE TIME	100%: 10h14m / 80%: 7h47m
MAX ASSISTED SPEED	25km/h
DISPLAY	KD-21C LCD, Power +/-
ASSISTANCE	5 levels, Speed/Torque

OTHER FUNCTIONS

kickstand Ursus adjustable, bell, wheel reflectors

NOTE	kickstand Ursus adjustable, bell

BLACK/ORANGE MATT	
43	0115301750

EXTRAFOLDING 7.1 E

ecologic | BAFANG | 522WH | KD-21C LCD | 20X4" | 7 S



FRAME	Alu 20" FAT, foldable, integrated battery, integrated HT, disc brake, internal cables
FORK	Susp 45mm 20"x4", alu crown, whith mechanical lockout
HEADSET	FSA integrated 1"1/8
CRANKSET	Alu 170mm, 42T, cartridge
REAR DERAILLEUR	Shimano Tourney RD-FT35D
SHIFTERS LEVERS	Shimano Tourney SL-RS35 RevoShift, 7s
BRAKES	Hydraulic disk, Rotor 180 mm, with brake lever switch
FREEWHEEL	Shimano Tourney 7s 14-28
PEDALS	Resin foldable
HUBS	Alu 36h, axle 135 F/175 R, motor on rear
RIMS	20" alu, double wall, 36h
STEM	Alu, foldable, adjustable
HANDLEBAR	Alu, 20mm rise
SEATPOST	Alu with clamp, 33,9mm
SADDLE	Selle Royal Wave
TYRES	Fat City 20"x4"
MUDGUARDS	Steel painted
CHAINCOVER	Bash guard
CARRIERS	Alu rear carrier custom, 25kg
EXTERNAL LIGHTS	Spanninga front (19Lux) and rear LED 36V, controlled by display

MOTOR	Bafang brushless 36V 250W, on rear hub
SENSOR TYPE	Cadence, w/12 pulses
BATTERY	Li-Ion 36V, 522Wh, inside the frame, with BMS
CHARGER TYPE	2A Europlug
CHARGE TIME	100%: 8h33m / 80%: 6h27m
MAX ASSISTED SPEED	25km/h
DISPLAY	KD-21C LCD, Power +/-
ASSISTANCE	5 levels, Speed/Torque

OTHER FUNCTIONS

kickstand Ursus adjustable, bell, wheel reflectors

NOTE	kickstand Ursus adjustable, bell

BLACK/ORANGE MATT	
43	0115314850
BLACK/ANTHRACITE MATT	
43	0115314800

EXTRAFOLDING

ecologic | BAFANG | 540WH | KD-58C LCD | 20X4" | 7 S



FRAME	Alu 20" FAT, foldable, integrated HT, disc brake
FORK	Susp 45mm 20"x4", alu crown, whith mechanical lockout
HEADSET	Integrated 1"1/8, threaded
CRANKSET	Alu 170mm, 42T, cartridge
REAR DERAILLEUR	Shimano Tourney RD-FT35D
SHIFTERS LEVERS	Shimano Tourney SL-RS35 RevoShift, 7s
BRAKES	Hydraulic disk, Rotor 160 mm, with brake lever switch
FREEWHEEL	Shimano Tourney 7s 14-28
PEDALS	Resin foldable
HUBS	Alu 36h, axle 135 F/175 R, motor on rear
RIMS	20" alu, double wall, 36h
STEM	Alu, foldable, adjustable
HANDLEBAR	Alu, 20mm rise
SEATPOST	Alul with clamp, 27,2mm, 400mm long
SADDLE	Selle Royal Wave
TYRES	Fat Trail 20"x4"
MUDGUARDS	Steel painted
CHAINCOVER	Bash guard
CARRIERS	Alu integrato al telaio
EXTERNAL LIGHTS	Spanninga front (19Lux) and rear LED 36V, controlled by display

MOTOR	Bafang brushless 36V 250W, on rear hub
SENSOR TYPE	Cadence, w/12 pulses
BATTERY	Li-Ion 36V, 540Wh, behind seat tube, with BMS
CHARGER TYPE	2A Europlug
CHARGE TIME	100%: 8h50m / 80%: 6h40m
MAX ASSISTED SPEED	25km/h
DISPLAY	KD-58C LCD, Power +/-
ASSISTANCE	5 levels, Speed/Torque

OTHER FUNCTIONS
Walking assistance, External light control, Speed information

NOTE	kickstand on CS, bell, wheel reflectors

BLACK/YELLOW MATT	
43	0115312700
GREEN/BLACK MATT	
43	0115312705

E-FOLDING

ecologic | 35NM | 313WH | A15 LED | 20" | 7 S



FRAME	Alu 20", foldable, with integrated battery
FORK	Hi-Ten Tig 20"
HEADSET	Integrated 1"1/8, threaded, with cap
CRANKSET	Byte alu 152mm, 42T, cartridge
REAR DERAILLEUR	Shimano Tourney RD-TF35
SHIFTERS LEVERS	Shimano Tourney SL-RS35 RevoShift, 7s
BRAKES	Promax alu, V-Brake, with brake lever switch
PEDALS	Resin foldable
HUBS	Alu 36h, Shimano front, motor on rear
RIMS	Beretta 20" alu, double wall, 36h
STEM	Alu, foldable, adjustable
HANDLEBAR	Alu, 20mm rise
SEATPOST	Alu with clamp, 34mm, 500mm long
SADDLE	Selle Royal Mach
TYRES	20"x1,75"
MUDGUARDS	Single stay speedy
CHAINCOVER	Plastic, L type
CARRIERS	Alu rear carrier with spring
EXTERNAL LIGHTS	Front and rear LED, controlled by display

MOTOR	Ananda brushless 36V 250W, on rear hub
SENSOR TYPE	Cadence, w/12 pulses
BATTERY	Li-Ion 36V, 313Wh, inside down tube, with BMS
CHARGER TYPE	2A Europlug
CHARGE TIME	100%: 5h20m / 80%: 3h52m
MAX ASSISTED SPEED	25km/h
DISPLAY	Atala A15 LED UART, Power +/-
ASSISTANCE	5 levels, Speed/Torque

OTHER FUNCTIONS

kickstand Ursus adjustable, bell, wheel reflectors

NOTE	kickstand Ursus adjustable, bell

OPEN SIZE: L 156CM, H 117CM, W 59CM
FOLDED SIZE: L 83CM, H 68CM, W 42CM

NOTE	kickstand Ursus adjustable, bell

BLACK/GREEN MATT

33	0115302050

THE SMART SYSTEM

Il sistema intelligente ti porta nel futuro digitale dell'eBike e garantisce un divertimento di guida sempre più personalizzato: l'app eBike Flow e tutti i componenti, come la drive unit, la batteria e il display, sono completamente connessi. È sufficiente trasferire gli aggiornamenti over-the-air, in modo che l'eBike rimanga aggiornata anche dopo l'acquisto. L'app eBike Flow ti offre continuamente nuove funzioni: Ad esempio, puoi utilizzare la funzione di navigazione, ampliare la protezione contro il furto, adattare le modalità di assistenza e le indicazioni sul display ai tuoi desideri o sbloccare la tua eBike con Kiox 300 o Kiox 500.

Nel sistema intelligente, puoi scegliere tra diverse unità di trazione. Che si tratti di eMTB o eCity, la giusta drive unit offre una buona sensazione di pedalata e un maggiore divertimento di guida.

The intelligent system takes you into the digital future of eBiking and ensures even more personalized riding fun: the eBike Flow app and all components, such as the drive unit, battery and display, are fully networked. Simply transfer updates over the air, so that your eBike remains up to date even after purchase. The eBike Flow app continuously offers you new functions: For example, you can use the navigation function, extend the theft protection, adapt the assistance modes and display information to your wishes or unlock your eBike with Kiox 300 or Kiox 500.

In the intelligent system, you can choose between different drive units. Whether eMTB or eCity, the right drive unit offers a good pedal sensation and more riding fun.

DRIVE UNIT

The smart system



PERFORMANCE LINE CX (BDU374)

La Performance Line CX (BDU374Y) è un sistema di trazione potente e dinamico, che garantisce facilità di utilizzo e una sensazione di pedalata unica. Va al limite insieme a te, per un divertimento ancora maggiore su terreni tecnicamente impegnativi.

COPPIA MASSIMA 85 Nm
SUPPORTO MASSIMO 340%

The Performance Line CX (BDU374Y) is a powerful and dynamic drive system that guarantees ease of use and a unique riding sensation. It goes to the limit with you, for even more fun on technically challenging terrain.

MAXIMUM TORQUE 85 Nm
MAXIMUM SUPPORT 340%



PERFORMANCE LINE (BDU336)

Versatile e silenziosa, anche la Performance Line fa ora parte del sistema intelligente. Approfitta dei vantaggi, resta in movimento e continua a esplorare i dintorni. Nonostante il potente supporto, la drive unit offre una sensazione di pedalata naturale e più sicurezza.

COPPIA MASSIMA 75 Nm
SUPPORTO MASSIMO 340%

Versatile and quiet, the Performance Line is now also part of the intelligent system. Enjoy the benefits, stay on the move and continue to explore the surroundings. Despite the powerful support, the drive unit offers a natural riding sensation and more safety.

MAXIMUM TORQUE 75 Nm
MAXIMUM SUPPORT 340%



ACTIVE LINE (BDU332)

Al lavoro la mattina e al ristorante la sera: con Active Line, pedalare è divertente. È silenziosissima e fornisce un supporto armonico, pertanto è ideale per i percorsi in città. L'accelerazione finemente dosata e la resistenza alla pedalata appena percepibile oltre i 25 km/h o in modalità Off rendono ogni pedalata rilassante, trasformandola in una breve attività nel tempo libero, persino nel traffico all'ora di punta.

COPPIA MASSIMA 40 Nm
SUPPORTO MASSIMO 340%

At work in the morning and in the restaurant in the evening: with the Active Line, cycling is fun. It is whisper-quiet and provides harmonious support, making it ideal for city riding. The finely dosed acceleration and barely noticeable pedal resistance above 25 km/h or in Off mode make every ride relaxing and a short leisure activity, even in rush hour traffic.

MAXIMUM TORQUE 40 Nm
MAXIMUM SUPPORT 340%

POWERTUBE

Fonte di energia versatili: le PowerPack Frame sono installate all'esterno del telaio nel punto più viccino al baricentro della bicicletta. Hanno un'impugnatura con la quale puoi rimuoverle facilmente e trasportarle comodamente.
Sono disponibili in tre versioni: 545 Wh, 400Wh e 300 Wh. Tutte le PowerPack nel sistema intelligente hanno lo stesso supporto. Quindi puoi inserire facilmente una nuova batteria se la geometria dell'eBike lo consente. Con una batteria più piccola riduci il peso, con una più grande aumenti l'autonomia.

Versatile energy sources: The Frame PowerPacks are installed on the outside of the frame at the point closest to the bike's center of gravity. They have a handle that allows you to easily remove them and carry them comfortably.
They are available in three versions: 545 Wh, 400 Wh and 300 Wh. All PowerPacks in the intelligent system have the same holder. This means you can easily insert a new battery if the geometry of the eBike allows it. With a smaller battery you reduce the weight, with a larger one you increase the range.



POWERPACK

Per maggior esigenze in termini di potenza e stile: garantiscono alto potenziale energetico e, grazie alle dimensioni compatte e alla forma minimalista, si integrano perfette col design dell'eBike. Un fermo ne impedisce la caduta tuttavia, anche se è presente, le batterie possono essere rimosse in modo semplice e pratico.
I PowerTube del sistema intelligente sono disponibili in tre versioni: 750Wh, 625Wh e 500Wh. I nostri telai sono già predisposti per tutte e tre le batterie. Questo significa che sarai pronto per ogni esigenza, sia per le brevi distanze in città, sia per la guida sportiva di una eMTB.

For higher demands in terms of power and style: PowerTubes guarantee high energy potential on every tour and, thanks to their compact dimensions and minimalist shape, integrate perfectly into the design of the eBike.
A lock prevents them from falling out, but even if it is present, the batteries can still be removed easily and conveniently. The PowerTubes in the intelligent Bosch system are available in three versions: 750Wh, 625Wh and 500Wh. Our frames are already prepared for all three batteries. This means that you are prepared for every requirement, whether for short distances in the city or for sporty riding of an eMTB.



CHARGER

Un solo carica batterie leggero (800gr) e compatto per PowerTube e PowerPack da 4 A o 2 A. Il carica batterie del Sistema Intelligente non è compatibile con il Il sistema Bosch eBike 2.

A single lightweight (800 gr) and compact battery charger for PowerTube and PowerPack 4 A or 2 A. The Intelligent System battery charger is not compatible with the Bosch eBike 2 system.



POWERMORE 250

Batteria supplementare portatile, grande come una borraccia, che garantisce ulteriore autonomia. Compatto e con soli 1,5kg, Range Extender può essere fissato facilmente al porta borraccia ed è combinabile con tutte le batterie del sistema intelligente. Informati per sapere se puoi utilizzarlo sulla tua eBike.

Portable, water bottle-sized supplementary battery that provides additional autonomy. Compact and weighing only 1.5kg, the Range Extender can be easily attached to the water bottle holder and can be combined with all intelligent system batteries. Find out in advance whether you can use it on your eBike.



	POWERTUBE 800	POWERTUBE 600	POWERTUBE 750	POWERTUBE 625	POWERTUBE 500	POWERPACK 400
TENSIONE *Voltage*	36 V	36 V	36 V	36 V	36 V	36 V
KG TELAIO *Frame*	3,9 kg	3,0 kg	4,3 kg	3,6 kg	3,0 kg	2,2 kg
RICARICA *Charge*	6,9 h	5,3 h	6 h	5,4 h	4,5 h	3,5 h

*con il Fast Charger da 6A **with the 6A Fast Charger*

THE E-BIKE 2 SISTEM

PERFORMANCE LINE CX



Compatta, leggera e più potente, combina a materiali di alta qualità, una trazione estremamente potente e sensori di fascia alta. L'eMountain biking sul trail assume una dimensione completamente nuova. Coppia fino a 85 Nm, feature nei comandi motore e una modalità eMTB evoluta, per un'esperienza emozionante: naturale,intuitiva, potente.

COPPIA MASSIMA 85 Nm **SUPPORTO MASSIMO 340%**

Compact, lightweight and more powerful, it combines high-quality materials, an extremely powerful drive and high-end sensors. This takes eMountain biking on the trail to a whole new dimension. With up to 85 Nm of torque, features in the motor control and an advanced eMTB mode, the Performance Line CX offers an emotional riding experience: natural, intuitive, powerful.

MAXIMUM TORQUE 85 Nm ***MAXIMUM SUPPORT 340%***

PERFORMANCE LINE



Sistema di trazione versatile, per fare sport nel verde, andare al lavoro o rilassarsi durante il tempo libero, fornisce il giusto supporto sempre al momento giusto. Disponibili due versioni. La versione Cruise silenziosa e leggera garantisce il supporto fino a 25km/h con una coppia massima di 65Nm, apprezzata per la sensazione di pedalata naturale e sportiva, assicurando divertimento anche su terreni mossi.

COPPIA MASSIMA 65 Nm **SUPPORTO MASSIMO 300%**

Versatile traction system, for doing sports in the countryside, going to work or relaxing during your free time, provides the right support always at the right time. Two versions available. The Cruise version guarantees support up to 25km/h with a maximum torque of 65Nm, appreciated for the natural and sporty pedaling sensation, ensuring fun even on rough terrain.

MAXIMUM TORQUE 65 Nm ***MAXIMUM SUPPORT 300%***

ACTIVE LINE PLUS



Ideale per gli spostamenti quotidiani e per le uscite non programmate. Silenziosa, piccola ma potente, offre maggior divertimento. Niente più fastidioso rumore di sottofondo e una resistenza alla pedalata appena percepibile oltre i 25 km/h: fare nuove esperienze e scoperte diventa più semplice.

COPPIA MASSIMA 50 Nm **SUPPORTO MASSIMO 270%**

Ideal for daily commutes and unplanned outings. Silent, small but powerful, it offers more fun. No more annoying background noise and barely perceptible pedal resistance above 25 km/h: new experiences and discoveries become easier.

MAXIMUM TORQUE 50 Nm ***MAXIMUM SUPPORT 270%***

ACTIVE LINE



Per andare in ufficio al mattino o per il tempo libero, con la Active Line muoversi nel traffico della città è un divertimento. Armonica, leggera e silenziosa, è ideale per tutti i percorsi cittadini. Accelerazione dosata in modo armonico e resistenza alla pedalata appena percepibile oltre i 25km/h o in modalità off.

COPPIA MASSIMA 40 Nm **SUPPORTO MASSIMO 260%**

Whether you're going to the office in the morning or spending your free time, the Active Line makes moving through city traffic a pleasure. Harmonious, light and silent, it's ideal for all city routes. Harmoniously dosed acceleration and barely noticeable pedal resistance above 25km/h or in off mode.

MAXIMUM TORQUE 40 Nm ***MAXIMUM SUPPORT 260%***

POWERTUBE

Fonte di energia versatili: le PowerPack Frame sono installate all'esterno del telaio nel punto più viccino al baricentro della bicicletta. Hanno un'impugnatura con la quale puoi rimuoverle facilmente e trasportarle comodamente.
Sono disponibili in tre versioni: 545 Wh, 400Wh e 300 Wh. Tutte le PowerPack nel sistema intelligente hanno lo stesso supporto. Quindi puoi inserire facilmente una nuova batteria se la geometria dell'eBike lo consente. Con una batteria più piccola riduci il peso, con una più grande aumenti l'autonomia.

Versatile energy sources: The Frame PowerPacks are installed on the outside of the frame at the point closest to the bike's center of gravity. They have a handle that allows you to easily remove them and carry them comfortably.
They are available in three versions: 545 Wh, 400 Wh and 300 Wh. All PowerPacks in the intelligent system have the same holder. This means you can easily insert a new battery if the geometry of the eBike allows it. With a smaller battery you reduce the weight, with a larger one you increase the range.



POWERPACK

Per maggior esigenze in termini di potenza e stile: le PowerTube garantiscono alto potenziale energetico durante ogni tour e, grazie alle dimensioni compatte e alla forma minimalista, si integrano perfette col design dell'eBike.
Un fermo ne impedisce la caduta tuttavia, anche se è presente, le batterie possono comunque essere rimosse in modo semplice e pratico.
I PowerTube nel sistema intelligente di Bosch sono disponibili in tre versioni: 750 Wh, 625 Wh e 500 Wh. I nostri telai sono già predisposti per tutte e tre le batterie. Questo significa che sarai pronto per ogni esigenza, sia per le brevi distanze in città, sia per la guida sportiva di una eMTB.

For higher demands in terms of power and style: PowerTubes guarantee high energy potential on every tour and, thanks to their compact dimensions and minimalist shape, integrate perfectly into the design of the eBike.
A lock prevents them from falling out, but even if it is present, the batteries can still be removed easily and conveniently.
The PowerTubes in the intelligent Bosch system are available in three versions: 750 Wh, 625 Wh and 500 Wh. Our frames are already prepared for all three batteries. This means that you are prepared for every requirement, whether for short distances in the city or for sporty riding of an eMTB.



CHARGER

Un carica batterie leggero (800gr) e compatto per PowerTube e PowerPack da 4 A o 2 A.
Il carica batterie del Sistema Intelligente non è compatibile con il Il sistema Bosch eBike 2.

A single lightweight (800gr) and compact battery charger for PowerTube and PowerPack 4 A or 2 A.
The Intelligent System battery charger is not compatible with the Bosch eBike 2 system.



	POWERTUBE 400	POWERTUBE 500	POWERTUBE 625	POWERPACK 300	POWERPACK 400	POWERPACK 500
TENSIONE *Voltage*	36 V	36 V	36 V	36 V	36 V	36 V
KG TELAIO *Frame*	2,9 kg	2,8 kg	3,5 kg	2,5 kg	2,5 kg	2,5 kg
RICARICA *Charge*	2,5 h	3 h	3,7 h	2,5 h	2,5 h	2,5 h

*con il Fast Charger da 6 A **with the 6A Fast Charger*

INTUVIA

Praticità e controllo della tua ebike garantiti: il display è sempre ben visibile in qualsiasi situazione e mostra tutte le informazioni importanti. Il ciclo-computer viene controllato in modo intuitivo dall'unità di comando separata, così le mani restano sul manubrio.

Easy and intuitive control of your eBike guaranteed: the display is easy to read in any situation and shows you all the important information. The separate control unit allows you to keep your hands safely on the handlebar.



PURION

Concentratevi sulle informazioni essenziali e visualizzatele solo con un clic del pollice: il ciclocomputer Purion è sinonimo di efficienza e precisione massime.

You can focus on the essentials and get all important information at a click of your thumb: the Purion on-board computer operates with maximum efficiency and precision.



PURION 200

Unità di comando con display a colori compatto e completamente connessa al sistema intelligente. Questa soluzione all-in-one, che rende il manubrio più ordinato, viene posizionata direttamente vicino al pollice e offre una visualizzazione nitida dei dati di marcia e un controllo semplice ed ergonomico di tutte le funzioni dell'eBike. Combina Purion 200 con un display aggiuntivo per un ulteriore comfort.

Control unit with compact colour display and fully networked in the smart system. The all-in-one solution ensures an uncluttered handlebar, is in close proximity to the thumb and offers a razor-sharp display of ride data as well as simple, ergonomic control of all eBike functions. Combine the Purion 200 with an additional display – for even greater convenience.



LED REMOTE

Il LED Remote collega l'eBike all'app eBike Flow. Consente di accedere facilmente a tutti i dati di guida importanti ed è intuitivo; le mani restano sul manubrio in modo sicuro. Cambia le modalità di marcia, usa la camminata assistita e aziona il display o il Ride screen del tuo smartphone. Grazie al sistema intelligente, il LED Remote ti consente di effettuare in modo autonomo gli aggiornamenti per l'eBike.

The LED Remote connects your eBike with the eBike Flow app. It makes it easy to access all important ride data and is intuitive to use - your hands remain safely on the handlebars. Change riding modes, use the smart walk assistance and operate your display on your smartphone. Thanks to the smart system allows you to perform updates for your eBike for yourself.



KIOX

Il design si fonde con la funzionalità: il ciclo-computer Kiox è appositamente studiato per le esigenze dei ciclisti sportivi ambiziosi. Robusto, piccolo e compatto, è l'accompagnatore perfetto, sia fuoristrada che come partner per l'allenamento.

The LED Remote connects your eBike with the eBike Flow app. It makes it easy to access all important ride data and Design meets functionality: the Kiox on-board computer was specially developed for the needs of ambitious riders. Robust and small, the compact Kiox is the perfect companion - whether used off-road or as a partner in training.



KIOX 300

Robusto e intelligente, è il display per il sistema intelligente che ti accompagnerà nei tuoi spostamenti. Può essere controllato in modo intuitivo tramite l'unità di comando, compatto e protetto da getti d'acqua e da polvere. Il display a colori è leggibile in modo ottimale. Ideale per le avventure sportive e i tour più impegnativi.

The display for the smart system, and are your robust, intelligent companions. It can be intuitively controlled from the control unit, is compact and protected from splashing water and dust. The color display is optimally readable. Ideal for sporting adventures and challenging rides.

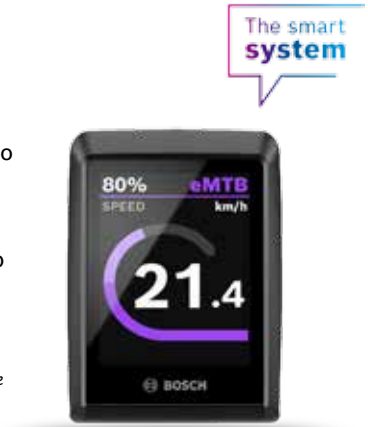

CONNECT MODULE

Il ConnectModule è il componente hardware necessario per poter utilizzare il servizio eBike Alarm e aumentare così la protezione da furto. È dotato di sensori di movimento, di un modulo GPS e di una batteria propria. L'eBike Alarm funziona così anche senza la batteria eBike. Con l'aiuto dei sensori, il ConnectModule montato sotto il coperchio del motore può identificare i movimenti dell'eBike e attivare un allarme locale. Informati in anticipo per sapere se puoi utilizzare il Connect Module sulla tua eBike.

Solo per bici con il sistema intelligente.

The ConnectModule is the hardware component required to use the eBike Alarm service and thus increase theft protection. It is equipped with motion sensors, a GPS module and its own battery. The eBike Alarm thus also works without an eBike battery. With the help of sensors, the ConnectModule mounted under the engine cover can identify movements of the eBike and trigger a local alarm. Find out in advance whether you can use the Connect Module on your eBike.

Only for bikes with the intelligent system.



FLOW APP

L'app eBike Flow è il fulcro sistema intelligente di Bosch e ti offre un'esperienza di guida migliore e connessa: più sicura, più personalizzata e più confortevole.
Nel sistema intelligente, la drive unit è completamente collegata in rete con gli altri componenti della tua eBike. Con l'app eBike Flow, è possibile utilizzare funzioni digitali come l'activity-tracking, l'eBike Lock, aggiornare e personalizzare e la tua eBike.
L'applicazione è disponibile per App Store e Google Play. Una volta scaricata collega tua eBike!
Visita il sito Bosch eBike per tenerti aggiornate su tutte le novità.

Solo per bici con il sistema intelligente.

The eBike Flow app is the heart of Bosch's intelligent system and offers you a better and more connected riding experience: safer, more personalized and more comfortable.
In the intelligent system, the drive unit is fully networked with the other components of your eBike. With the eBike Flow app, you can use digital functions such as activity tracking, eBike Lock, update and personalize your eBike.
The application is available for the App Store and Google Play.
Once downloaded, connect your eBike!
Visit the Bosch eBike website to stay up to date with all the latest news.

Only for bikes with the intelligent system.

ASSISTENZA

Per richiedere modifiche della configurazione della eBike con il sistema Bosch eBike 2 ed il sistema intelligente usa il nuovo programma Bosch Diagnostic Tool 3. Sarà molto più facile e veloce richiedere assistenza grazie al cloud di Bosch per cui avverrà tutto da remoto.

To request changes to the eBike configuration with the Bosch eBike 2 system and the intelligent system use the new Bosch Diagnostic Tool 3 program. It will be much easier and faster to request assistance thanks to the Bosch cloud so everything will happen remotely.

YAMAHA

DRIVE UNIT

Un'assistenza fluida e naturale, con 4 livelli di potenza: Eco+, Eco, Standard, High. Il biker può calibrare la potenza erogata dal motore, in base al percorso e all'autonomia rimanente della batteria.

Sistema di montaggio centrale, in cui unità motrice e batteria sono vicino ai pedali per un baricentro basso ed un bilanciamento del peso e una stabilità eccellenti.

Smooth and natural assistance, 4 power levels: Eco+, Eco, Standard, High. The biker can calibrate the power delivered by the motor, based on the route and the remaining battery life.

Central mounting system, in which the motor unit and battery are close to the pedals for a low center of gravity and excellent weight balance and stability.



DISPLAY

Layout verticale e la retroilluminazione per una migliore leggibilità in tutte le condizioni; il comando remoto sulla manopola sinistra aumenta l'ergonomia e la sicurezza del sistema.

The vertical layout and the backlight of the removable LCD display improve the readability in all riding conditions; the remote control on left grip increase ergonomics and safety of the system.

400/500 WH BATTERIES

Batterie con capacità di 400 e 500 Wh performanti, leggere, ricaricabili anche a bordo della bicicletta e removibili lateralmente.

RANGE 140 km (400 Wh in Eco+)

Batteries with a capacity of 400 and 500 Wh performing, light, rechargeable on the bicycle and removable laterally.

RANGE 140 km (400 Wh in Eco+)

Y-CROSS A4.4

MOTOR	Pwseries ST, 250 W, 36 V
MAX TORQUE	70 Nm
SENSOR TYPE	Torque
BATTERY	External on downtube, DT400
CHARGER TYPE	25 km/h
CHARGE TIME	Up to 3.5 hours
MAX ASSISTED SPEED	25 km/h
DISPLAY	Display A
ASSISTANCE	+Eco: 50% Eco: 100% Standard: 190% High-Performance: 280%



E-BIKE SYSTEMS

Atala è presente nel settore delle bici elettriche dal 2008, dai suoi inizi nel mercato Italiano contribuito alla sua crescita ed espansione con 50.000 bici elettriche prodotte annualmente oggi.
I modelli trattati sono stati i più svariati, come i più diversi sono stati i sistemi elettrici impiegati. Questo ci ha permesso di avere una conoscenza globale su questi prodotti, e nel tempo a prendere parte alla loro definizione.
Oggi Atala propone bici elettriche con sistemi di marchi importanti e bici elettriche con sistemi proprietari, sviluppati da noi. Così abbiamo la possibilità di proporre prodotti con caratteristiche funzionali ed a prezzi che più si sposano a specifici mercati.

Atala has been present in the electric bike sector since 2008, from its beginnings in the Italian market contributed to its growth and expansion with 50,000 electric bikes produced annually today.
The models treated have been the most varied, as the most diverse have been the electrical systems used. This has allowed us to have a global knowledge of these products, and over time to take part in their definition.
Today Atala offers electric bikes with systems of important brands and electric bikes with proprietary systems, developed by us. So we have the possibility of offering products with functional characteristics and at prices that are more suited to specific markets.

AM80 | ECOLOGIC | ECOTRONIC | ANANDA | PHILION-JOYCUBE

I sistemi sviluppati da Atala sono: AM80, Ecologic e il nuovo EcoTronic. Questi sistemi sono sviluppati in collaborazione con storici e primari attori del settore della mobilità elettrica. Garanzia, per noi, di una lunga, dinamica e proficua collaborazione; per i clienti, di un prodotto qualitativo e con assistenza continuativa nel tempo. Maggiormente impiegati sono Ananda e Phylion/Joycube, che rappresentano l'eccellenza nella mobilità elettrica, per tecnologia e qualità.
I sistemi Atala sono realizzati in co-design con questi partner. Ogni singolo aspetto del funzionamento della bici, da come parte a come stabilizza la velocità, da come reagisce in base alla pedalata, al menù dei display, è definito da Atala e appartiene ad Atala. Prodotti offerti da questi fornitori ad altri marchi di bici, non hanno lo stesso funzionamento e prestazioni, anche se hanno somiglianze estetiche coi nostri.
Per il 2025 ci siamo concentrati su aspetti quali: alte prestazioni di coppia e potenza massima, ergonomia di guida, sicurezza di guida, connessione col cellulare.

The systems developed by Atala are: AM80, Ecologic and the new EcoTronic. These systems are developed in collaboration with historic and leading players in the electric mobility sector. For us, they guarantee a long, dynamic and profitable collaboration; for customers, a quality product with continuous assistance over time. The most widely used are Ananda and Phylion/Joycube, which represent excellence in electric mobility, for technology and quality.
The Atala systems are made in co-design with these partners. Every single aspect of the bike's operation, from how it starts to how it stabilizes the speed, from how it reacts based on pedaling, to the display menu, is defined by Atala and belongs to Atala. Products offered by these suppliers to other bike brands do not have the same operation and performance, even if they have aesthetic similarities with ours.
For 2025 we have focused on aspects such as: high performance of torque and maximum power, riding ergonomics, riding safety, mobile phone connection.



ANANDA

Da 20 anni nel mercato, realizza motori, controller, display e sensori. I moderni impianti produttivi, consentono di offrire prodotti innovativi e di qualità, con una continua proposta di sistemi all'avanguardia. Dal 2024 è una azienda quotata alla borsa di Shanghai.

For 20 years in the market, it produces motors, controllers, displays and sensors. The modern production plants allow us to offer innovative and quality products, with a continuous proposal of cutting-edge systems.
Since 2024 it is a company listed on the Shanghai stock exchange.

PHYLION/JOYCUBE

Fra i più importanti produttori di batterie al Litio per la mobilità elettrica leggera. Presta continua attenzione alla ricerca di nuovi materiali, all'elettronica, alla diagnosi e alle nuove normative. Si contraddistingue per i continui investimenti in ricerca e l'attenzione alla qualità.

Among the most important manufacturers of lithium batteries for light electric mobility. It pays constant attention to research into new materials, electronics, diagnosis and new regulations. It stands out for its continuous investments in research and attention to quality.

AM80

Qualità, affidabilità e convenienza con cuore italiano: questi i valori che si rispecchiano nel sistema elettrico proposto da Atala, AM80. Nato da un'idea del dipartimento Ricerca e Sviluppo di Atala per rispondere all'esigenza di sviluppare biciclette di alta qualità e prestazione con motore centrale.

Quality, reliability and convenience together with an italian heart: all these values can be reflected in the new electric System, Atala AM80. Developed upon an idea of the Atala R&D Department to answer the customer needs of quality and performing eBike with central drive unit.



DRIVE UNIT

5 livelli di assistenza supportano il ciclista dal 50 al 400% della forza da lui espressa (calcolata tramite il sensore di coppia all'interno del movimento centrale).

5 power modes support the rider from 50 to 400% of its power (calculated by the torque sensor inside the bottom bracket).



DISPLAY

Velocità, stato di carica e livello di assistenza sono immediatamente accessibili, in schermata completa sono visualizzate le informazioni di potenza istantanea erogata dal motore, potenza espressa dall'utente e consumo chilometrico per gestire l'autonomia.
Il comando remoto di piccole dimensioni, a sinistra del manubrio è facilmente raggiungibile dal pollice della mano sinistra ed essendo, non influenzando i comandi della bici.
La "camminata assistita" è attivabile in qualsiasi modalità di assistenza con la pressione prolungata del tasto "V" e la velocità non supera i 6 km/h come stabilito da norma di legge.

Speed, charge status and assistance level are immediately accessible, the full screen displays information on the instantaneous power delivered by the engine, power expressed by the user and mileage consumption to manage autonomy. The small remote control, on the left of the handlebars, is easily reachable by the thumb of the left hand and is not influencing the bike controls. The "assisted walk" can be activated in any assistance mode with a long press on the "V" button and the speed does not exceed 6 km/h as established by law.prolungata del tasto "V" sul comando remoto. La massima velocità raggiungibile non supera i 6 km/h come stabilito da norma di legge. The "walk" function can be activated in any power mode simply with a long press of the "V" button on the control. The maximum speed never exceed 6 km/h as established by law.

ENERGY PACK 540 WH

Le EnergyPack sono accumulatori con tecnologia a ioni di litio, non soffrono di effetto memoria e possono essere caricate e scaricate a piacimento senza preoccupazioni.

EnergyPack are batteries with lithium-ion technology inside they don't suffer from memory effect and can be charged and discharged at will without any worries.

B-CROSS SUV

MOTOR	AM-80 36 V, 250 W
MAX TORQUE	80 Nm
SENSOR TYPE	Torque
BATTERY	EnergyTube 500, frametype, 2,9 kg
CHARGER TYPE	2 A
CHARGE TIME	Up to 7 hours
MAX ASSISTED SPEED	25 km/h
DISPLAY	AM LCD full-colour
ASSISTANCE	Mode 1: 50% Mode 2: 100% Mode 3: 200% Mode 4: 300% Mode 5: 400%



AM80 agile

AM80 easy by ANANDA

2 NUOVI SISTEMI PER TREKKING E CITY BIKE

Recentemente abbiamo introdotto gli AM80 Agile e AM80 Easy, per trekking e city. Entrambi sono progettati per avere una partenza dopo pochi gradi di movimento della pedivella (15°) e con una erogazione potente per superare abilmente salite. Ne risulta un funzionamento comodo e diretto per percorsi urbani con più soste e ripartenze. Entrambi hanno 5 livelli di supporto selezionabili, per ognuno il motore fornisce potenza in base a quanto stiamo spingendo sui pedali e un fattore relativo al livello scelto, dal 40% al 250%.

AM80 Agile, giunto alla sua seconda generazione, è il motore dalle alte prestazioni, con 100Nm di coppia massima e 520W di potenza massima.

AM80 Easy è il motore dalle prestazioni più contenute ma di tutto rispetto, con 70Nm di coppia massima e 455W di potenza massima.

Su entrambi, la presenza di una contattiera consente una rapida ispezione dei cablaggi senza rimuovere il motore dal telaio.



2 NEW SYSTEMS FOR TREKKING AND CITY BIKE

We recently introduced the AM80 Agile and AM80 Easy, for trekking and city. Both are designed to have a start after a few degrees of crank movement (15°) and with a powerful delivery to skillfully overcome climbs. The result is comfortable and direct operation for urban routes with multiple stops and starts.
Both have 5 selectable support levels, for each the engine provides power based on how much we are pushing on the pedals and a factor related to the chosen level, from 40% to 250%.

AM80 Agile, now in its second generation, is the high-performance engine, with 100Nm of maximum torque and 520W of maximum power.
AM80 Easy is the engine with the most modest but respectable performance, with 70Nm of maximum torque and 455W of maximum power.

On both, the presence of a contact board allows for quick inspection of the wiring without removing the engine from the frame.



Le novità per le bici col motore Agile sono:

- Nuovo display TFT (Thin Film Transistor, a matrice attiva) a colori, con comando remoto, presa USB e sensore crepuscolare
- Bluetooth sui display che permette di associare la bici al cellulare
- Funzione Daytime running light, per l'accensione delle luci di posizione di giorno, anteriori e posteriori
- Funzione luci STOP, che grazie ad un sensore fa accendere la luce posteriore ad una intensità maggiore durante una brusca frenata

Le novità per le bici 2025 col motore Easy sono:

- Batteria con capacità aumentata a 504Wh

The new features for the 2025 bikes with the Agile engine are:

- *New color TFT display, with remote control, USB socket and twilight sensor*
- *Presence of Bluetooth on the displays which allows you to pair the bike with your mobile phone*
- *Daytime running light function, to turn on the daytime running front and rear lights*
- *STOP light function, which thanks to a sensor turns on the rear light at a greater intensity during a sudden deceleration*

The new features for the 2025 bikes with the Easy engine are:

- *Battery with increased capacity to 504Wh*



ecologic



LA TRADIZIONALE FAMIGLIA DI BICI ELETTRICHE CON MOTORE AL MOZZO

Questa è la tradizionale famiglia di bici elettriche con motore al mozzo, con sensore di cadenza su movimento centrale.
I motori sono a 9 fili, con sensori ad effetto hall, per ottenere la velocità della bici e comandare il motore (brushless a 3 fasi) in base alla sua corretta posizione, senza ronzii all'attivazione.
Il riduttore interno ha ingranaggi doppi (uno per l'involucro del mozzo da far ruotare e l'altro per l'asse motore) per aumentarne la durata, con forma elicoidale per aumentare le coppia e ridurre il rumore.
Sono caratterizzati da un'alta coppia massima. Le bici 2025 hanno motori con: coppia massima 55Nm e 410W di potenza massima su ruota 26"/700c, coppia massima 50Nm e 480W di potenza massima su ruota 20"/24".
L'alta coppia permette di superare agevolmente salite: percorrendo una strada a 25km/h, la salita di un cavalcavia abbassa solo di poco la velocità (23km/h). Con motori meno performanti la velocità si abbassa di molto o addirittura non si riesce a superare la salita.
Il sensore di cadenza è di tipo integrato in un unico modulo e con 12 poli. Sostituisce l'ormai superato disco a magneti più sensore esterno, che talvolta poteva causare malfunzionamenti per la loro posizione relativa non corretta. Inoltre i 12 poli invece dei 5 o 7 magneti del passato permettono una partenza del motore con minor sforzo (minor angolo di rotazione iniziale della pedivella).

This is the traditional family of electric bikes with hub motor, with cadence sensor on the bottom bracket. The motors are 9-wire, with hall effect sensors, to obtain the speed of the bike and control the motor (3-phase brushless) based on its correct position, without buzzing when activated.
The internal reduction has double gears (one for the hub casing to rotate and the other for the motor axle) to increase its durability, with an helical shape to increase torque and reduce noise. They are characterized by a high maximum torque. The 2025 bikes have motors with: maximum torque 55Nm and 410W of maximum power if on a 26"/700c wheel, maximum torque 50Nm and 480W of maximum power if on a 20"/24" wheel.
The high torque allows you to easily overcome climbs: traveling on a road at 25km/h, the climb of an overpass lowers the speed only slightly (23km/h). With less performing motors the speed drops a lot or you can't even overcome the climb.
The cadence sensor is of the type integrated in a single module and with 12 poles. It replaces the now outdated magnetic disc plus external sensor, which could sometimes cause malfunctions due to their incorrect relative position. Furthermore, the 12 poles instead of the 5 or 7 magnets of the past allow the engine to start with less effort (lower initial rotation angle of the crankset).

5 livelli di supporto selezionabili, il motore spinge la bici ad una velocità prestabilita associata al livello stesso. Ogni livello è associato ad una coppia massima.

5 levels of selectable support, the motor pushes the bike at a pre-set speed associated with the level itself. Each level is associated with a maximum torque.

DISPLAY	TARGET SPEED	MAX TORQUE
OFF LEVEL	0 km/h	0 Nm
LEVEL 1	11 km/h	26 Nm
LEVEL 2	14 km/h	35 Nm
LEVEL 3	17 km/h	43 Nm
LEVEL 4	21 km/h	50 Nm
LEVEL 5	25 km/h	56 Nm

Il sensore a 12 poli permette di avere un contenuto angolo iniziale di ingaggio. Anche in salita, partendo da fermi, il motore rilascia subito una erogazione potente.



The 12-pole sensor allows for a low initial engagement angle. Even when climbing, starting from a standstill, the engine immediately releases powerful power.

Le novità per le bici 2025 col sistema Ecologic sono:

- Nuovo motore da 55/50Nm
- Funzione luci STOP, che grazie alla centraline e le leve freno, fa accendere la luce posteriore ad una intensità maggiore durante una frenata

The new features for the 2025 bikes with the Ecologic system are:

- *New 55/50Nm engine*
- *STOP light function, which thanks to a control unit turns on the rear light at a greater intensity during a sudden deceleration*

E-SPACE 7.5 26"

MOTOR	Ananda brushless 36V, on rear hub
POWER	Rated: 250W, Max: 410W
MAX TORQUE	55 Nm
SENSOR TYPE	Cadence, w/12 pulses
BATTERY	Li-Ion 36V, 540Wh, inside frame, with Smart BMS CAN, 2,7Kg
CHARGER TYPE	2A Europlug
CHARGE TIME	100%: 8h / 80%: 6h
MAX ASSISTED SPEED	25km/h
DISPLAY	A19 Digit LED CAN
ASSISTANCE	5 levels of Speed/Torque



ecoTronic

UN NUOVO SISTEMA PER LE CITY BIKE NATURALE, DIRETTO E AUTOMATICO

Le bici elettriche con motore al mozzo spesso utilizzano un sensore di cadenza, e si associa erroneamente il controllo impreciso della velocità al motore stesso. Tuttavia, è il tipo di sensore a influenzare la guida. La posizione del motore (mozzo o centrale) influisce solo sull'utilizzo: i motori centrali sono più efficaci in montagna poiché sfruttano il cambio. Una bici con motore al mozzo e sensore di coppia funziona come un motore centrale, offrendo un controllo immediato della velocità in base alla pressione sui pedali. Anche qui, come per l'AM80 Agile e Easy, la selezione del livello di supporto (5 totali) permette al motore di fornire una potenza dal 40% al 250% di quella dell'utente. Il funzionamento risulta più naturale, diretto e automatico (non si interviene sul display per variare la velocità), dato che affrontando una salita il motore risponderà con più potenza all'incremento della forza che si imprime sui pedali. E' l'ideale nei centri urbani dove per il traffico, semafori e veicoli da superare c'è sempre la necessità di adattare istantaneamente la velocità della bici. Per fare un paragone: con le tradizionali bici con motore al mozzo e sensore di cadenza (Ecologic) è come se usassimo il cruise control dell'auto, mentre se si ha il sensore di coppia (EcoTronic) è come se usassimo l'acceleratore dell'auto. In auto non sarebbe semplice circolare nel centro cittadino col cruise control e si preferirebbe l'uso dell'acceleratore.
Queste sono quindi le bici elettriche con sistema EcoTronic: motore al mozzo (come per le Ecologic) e sensore di coppia (e cadenza) integrato sul movimento centrale. Questa tipologia di bici sono sempre più diffuse nel nord Europa, in Germania e in Svizzera. E anche molte bici da corsa elettriche usano una soluzione del genere. Ne guadagna il comfort e l'ergonomia di guida, la reattività e la sicurezza.

A NEW SYSTEM FOR CITY BIKES NATURAL, DIRECT AND AUTOMATIC

Hub motor electric bikes often use a cadence sensor, and imprecise speed control is mistakenly associated with the motor itself. However, it is the type of sensor that influences riding. The position of the motor (hub or central) only affects use: central motors are more effective in the mountains because they use the gearbox. A bike with a hub motor and torque sensor works like a central motor, offering immediate speed control based on the pressure on the pedals. Here too, as with the AM80 Agile and Easy, the selection of the support level (5 total) allows the motor to provide power from 40% to 250% of that of the user.
Operation is more natural, direct and automatic (there is no need to intervene on the display to change the speed), since when tackling a climb the motor will respond with more power to the increase in force applied to the pedals. It is ideal in urban centers where traffic, traffic lights and vehicles to be overtaken always require the bike to instantly adapt its speed.
To make a comparison: with traditional bikes with a hub motor and cadence sensor (Ecologic) it is as if we were using the car's cruise control, while if you have the torque sensor (EcoTronic) it is as if we were using the car's accelerator. In a car it would not be easy to drive around the city center with cruise control and you would prefer to use the accelerator. These are therefore electric bikes with the EcoTronic system: hub motor (like the Ecologic) and torque sensor (and cadence) integrated into the bottom bracket. This type of bike is increasingly widespread in Northern Europe, Germany and Switzerland. And many electric racing bikes also use a solution like this. This improves comfort and riding ergonomics, reactivity and safety.

FUNZIONE SORPASSO

In modalità Cruise, basta pedalare più energicamente fino ad agganciare il pignone posteriore per passare alla velocità massima, per un sorpasso veloce e sicuro.

OVERTAKING FUNCTION

In Cruise mode, simply pedal harder until you engage the rear sprocket for maximum power, for fast and safe overtaking.



Grazie al sensore di coppia non servono più gli switch sulle leve freno, quindi su queste bici si hanno meno cavi in zona manubrio e la possibilità di usare freni idraulici Shimano.

Se non si ha bisogno di usare la bici in montagna, il sistema EcoTronic ha diversi vantaggi rispetto al motore centrale:
- Un sistema con motore al mozzo e centralina ha tecnologia più consolidata e raggiunge oggi livelli molto alti di affidabilità (alta qualità);
- Il sistema è distribuito su di versi componenti separati, quindi l'eventuale rottura di una parte (sensore, elettronica) necessita della sostituzione solamente della parte non funzionante;
- Hanno un costo inferiore ad un motore centrale.

Thanks to the torque sensor, the switches on the brake levers are no longer needed, so these bikes have fewer cables in the handlebar area and the possibility of using Shimano hydraulic brakes.

If you do not need to use the bike in the mountains, the EcoTronic system has several advantages over the central motor:
- *A system with a hub motor and control unit has more consolidated technology and today reaches very high levels of reliability (high quality);*
- *The system is distributed across several separate components, so the eventual breakage of a part (sensor, electronics) requires the replacement of only the non-functioning part;*
- *They cost less than a central motor.*

DUAL MODE

Oltre al funzionamento simile ai motori centrali, dal nome "Drive", c'è la possibilità di selezionare dal display (premendo insieme + e -) una differente funzionalità, come quella delle bici Ecologic, chiamata modalità "Cruise". Nelle aree urbane con poche interruzioni, può essere utile usare la bici in leggerezza senza fare fatica e selezionando la velocità di crociera da display, selezionando la modalità "Cruise".
Con la funzionalità "Dual Mode", una bici EcoTronic può funzionare sia come un motore centrale che come un tradizionale motore al mozzo.

In addition to the operation similar to central motors, called "Drive", there is the possibility of selecting from the display (by pressing + and - together) a different function, like that of Ecologic bikes, called "Cruise" mode. In urban areas with few interruptions, it can be useful to use the bike lightly without tiring and selecting the cruising speed from the display, selecting the "Cruise" mode.
With the "Dual Mode" function, an EcoTronic bike can function both as a central motor and as a traditional hub motor.

Novità aggiuntive per le bici EcoTronic sono:
- Display TFT a colori, con comando remoto, presa USB e sensore crepuscolare
- Bluetooth sui display che permette di associare la bici al cellulare
- Funzione Daytime running light, per l'accensione delle luci di posizione di giorno, anteriori e posteriori
- Nuovo motore al mozzo da 50/55Nm

The new features for the 2025 bikes with the Ecologic system are:
- *Color TFT display, with remote control, USB socket and twilight sensor*
- *Bluetooth on the displays that allows you to pair the bike with your cell phone*
- *Daytime running light function, to turn on the daytime running lights, front and rear*
- *New 50/55Nm hub motor*

SYSTEM DISPLAY



I sistemi AM80 Agile, AM80 Easy, EcoTronic e Ecologic usano diversi display in base alla tipologia e livello di bici: a LED LCD a lato o centrali con comando remoto, TFT con comando remoto. I display (a parità di comunicazione CAN o UART) sono intercambiabili, dando la possibilità di fare un upgrade nel tempo.

The AM80 Agile, AM80 Easy, EcoTronic and Ecologic systems use different displays based on the type and level of bike: LED LCD on the side or central with remote control, TFT with remote control. The displays (with the same CAN or UART communication) are interchangeable, giving the possibility of upgrading over time.

Importante novità per il 2025 è un display TFT (Thin Film Transistor) a colori, che offre una nitidezza e luminosità maggiore rispetto ai display LCD.
Il comando remoto è a 5 tasti (light, +, power/menu, -, walk) disposti in modo ergonomico ed intuitivo.
Presenta una presa USB, utile per caricare il cellulare quando viene associato alla bici e usato come schermo secondario o GPS.
Integra un sensore crepuscolare, per la commutazione automatica delle configurazioni diurna e notturna.

An important new feature for 2025 is a color TFT (Thin Film Transistor) display, and graphics that change color with each different support selected.
The remote control has 5 buttons (light, +, power/menu, -, walk) arranged in an ergonomic and intuitive way.
It has a USB socket, useful for charging the cell phone when it is associated with the bike and used as a secondary screen or GPS.
It integrates a twilight sensor, for automatic switching between day and night configurations.





SMARTPHONE APP

Le bici 2025 con sistemi AM80 Agile e EcoTronic sono dotate di display con comunicazione Bluetooth per interagire con l'App Ananda Ride che offre le funzionalità: controllo dei vari parametri e dati, personalizzazione dei livelli di supporto, impostazione di password per il display, ricerca della bici a distanza Bluetooth, Altre funzioni ora in sviluppo, inclusa la diagnosi del sistema.

The 2025 bikes with AM80 Agile and EcoTronic systems are equipped with displays with Bluetooth communication to interact with the Ananda Ride App which offers the following functions: control of various parameters and data, customization of support levels, setting passwords for the display, Bluetooth remote bike search, Other functions now in development, including system diagnosis.

BATTERIES

Tutti i sistemi AM80 Agile, AM80 Easy e EcoTronic impiegano batterie con smart BMS. E anche tutte le Ecologic del 2025. Questo significa che l'elettronica di gestione della batterie (Battery Management System) è di tipo intelligente e con comunicazione col sistema elettrico.

- L'elettronica evoluta gestisce le singole celle, monitorando funzionamento, errori, bilanciamento e correnti di auto-scarica, per una miglior durata nel tempo.
- La batteria scambia informazioni sul suo stato di carica e di funzionamento e di conseguenza la centralina principale attua specifiche strategie (risparmio energetico se bassa carica, visualizzazione livello carica e autonomia, visualizzazione avvisi).
- Nel caso di inutilizzo o di bassa tensione, la batteria entra in uno stato di consumo quasi azzerato, che permette l'utente di non caricarla per un anno.
- C'è la possibilità, tramite PC, di leggere i dati della batteria e di effettuare l'aggiornamento del firmware.

Tutte le batterie sui modelli 2025 già rispettano la nuova normativa Europea che definisce nuovi e stringenti standard di sicurezza delle batterie (EN50604), che sarà obbligatoria per vendere le bici dall'Agosto 2025. A garanzia di una aumentata sicurezza per il consumatore sin da ora. Alcune famiglie di bici hanno allestimenti con lo stesso modello di batteria e capacità di taglie differenti. In questi casi è possibile per l'utente fare successivamente l'upgrade alla taglia più grande.

All AM80 Agile, AM80 Easy and EcoTronic systems use batteries with smart BMS. And all Ecologic models from 2025. This means that the battery management electronics (Battery Management System) are intelligent and communicate with the electrical system.

- *Advanced electronics manage individual cells, monitoring operation, errors, balancing and self-discharge currents, for better durability over time.*
- *The battery exchanges information on its charge and operating status and consequently the main control unit implements specific strategies (energy saving if low charge, display of charge level and autonomy, display of warnings).*
- *In the event of non-use or low voltage, the battery enters a state of almost zero consumption, which allows the user not to charge it for a year.*
- *There is the possibility, via PC, to read the battery data and update the firmware.*

All batteries on the 2025 models already comply with the new European regulation that defines new and stringent battery safety standards (EN50604), which will be mandatory for selling bikes from August 2025. To guarantee increased safety for the consumer starting now. Some families of bikes have setups with the same battery model and capacity of different sizes. In these cases, it is possible for the user to subsequently upgrade to the larger size.



L'azienda produttrice si riserva il diritto di cambiare immagini, colori, specifiche e prezzi senza preavviso.
The manufacturing company takes the right to change pictures, colors, specs and prices without prior notice.

ROAD

Biciclette da corsa disegnate per chi si avvicina a questo sport con un budget ridotto ma non vuole rinunciare a prestazioni, velocità e precisione di cambiata coniugate con una grande comodità e facilità d'uso.

Racing bikes designed for those who approach this sport on a budget but do not want to give up performance, speed and precision of gear changes combined with great comfort and ease of use.



SLR 200



FRAME	Alu. Racing, integrated headset
FORK	Alu. With carbon blades
HEADSET	Integrated 1"1/8 Ahead
CRANKSET	Byte Racing CT alu. 50/34
REAR DERAILLEUR	Shimano Tiagra RD-4700 10s
FRONT DERAILLEUR	Shimano Tiagra FD-4700 31,8mm
SHIFTERS LEVERS	Shimano Tiagra ST-4700 10x2s
BRAKES	Alu. caliper
CASSETTE	Shimano CS-HG500 10s, 11/32
WHEELS	Byte Roubaix SL H30 Shimano
STEM	Byte Kute Alu. Oversize
HANDLEBAR	Byte Keek Alu. Oversize
SEATPOST	Byte King Alu. 27,2mm
SADDLE	Selle Royal Seta
TYRES	Vittoria Zaffiro folding 700x23

HIGHLIGHT
Shimano Tiagra 10 speed R/Derailleur with double crankset
Wheels with high profile 30mm with 20/24 inox flat spokes
Selle Royal Seta saddle
Alloy frame anf carbon fork

BLACK/GREEN	
47,5 - S	0115304200
51 - M	0115304210
54 - L	0115304220

SLR 150



FRAME	Alu. Racing, integrated headset
FORK	Hi-Ten Tig Road 28"
HEADSET	FSA No.16CC 1"1/8
CRANKSET	Byte alu. 50/34
REAR DERAILLEUR	Shimano Claris RD-R2000 8s
FRONT DERAILLEUR	Shimano Claris FD-R2000 31,8mm
SHIFTERS LEVERS	Shimano Claris ST-R2000 8x2s
BRAKES	Alu. caliper
CASSETTE	Shimano CS-HG41, 8s 11-30
PEDALS	Steel/Resin road
HUBS	Alu. 32 holes
RIMS	Alu. double wall 32 holes Byte Fiandre
STEM	Byte alu.
HANDLEBAR	Byte alu. road
SEATPOST	Byte alu. 27,2mm
SADDLE	Byte U Ride Vent
TYRES	Byte Gand 700x25

HIGHLIGHT
Alloy racing frame
Shimano Claris 8 speed F/Derailleur
Byte double wall rims
Byte with hole saddle

BLACK/YELLOW	
47,5 - S	0115243103
51 - M	0115243113
54 - L	0115243123



L'azienda produttrice si riserva il diritto di cambiare immagini, colori, specifiche e prezzi senza preavviso.
The manufacturing company takes the right to change pictures, colors, specs and prices without prior notice.

WELLNESS

Robuste, sicure, leggere e maneggevoli. Modelli versatili adatti per la cittò e per le gite fuori porta. Perfette per mantenersi in forma o per andare in ufficio.

Sturdy, safe, light and easy to handle. Versatile models suitable for the city and for trips out of town. Perfect for keeping fit or for going to the office.



TIME-OUT 21V MD



FRAME	Alu. 700c
FORK	Hi-Ten Tig Hybrid 28"
HEADSET	1" 1/8 Ahead
CRANKSET	Byte alu. 48/38/28
REAR DERAILLEUR	Shimano Tourney RD-TY500 7s
FRONT DERAILLEUR	Shimano Tourney FD-TY510 31,8mm
SHIFTERS LEVERS	Shimano ST-EF500 EZ Fire Plus 7x3s
BRAKES	Mechanical disc, Rotor 160mm
FREEWHEEL	Shimano Tourney 7s 14-34
PEDALS	Steel/Resin
WHEELS	Byte Ortles 700 Disc INT
STEM	Byte Ahead, alu. adjustable
HANDLEBAR	Byte alu. rise 20mm
SEATPOST	Byte alu. 27,2mm
SADDLE	Atala hybrid with hole
TYRES	Byte Padova 700x32

NOTE
Kickstand, reflectors on wheels

HIGHLIGHT
Shimano TY500 7 speed R/Derailleur
Push pull stef500 Shimano shifters
Disc brakes
Alloy adjustable stem

GREY/LIGHT BLUE	
49 - M	0115283603
54 - L	0115283613

NORTH BLACK MAN



FRAME	Alu. 700c
FORK	Suntour NEX 700c, alu. with alu, crown, 63mm
HEADSET	1" 1/8 Ahead
CRANKSET	Byte alu. 48/38/28
REAR DERAILLEUR	Shimano Tourney RD-TY300 7s
FRONT DERAILLEUR	Shimano Tourney FD-TY510 31,8mm
SHIFTERS LEVERS	Shimano ST-EF41 EZ Fire Plus
BRAKES	Alu. V-brake
FREEWHEEL	Shimano Tourney 7s 14-34
PEDALS	Steel/Resin
HUBS	Alu. 36 holes
RIMS	Alu. double wall, 36 holes Byte Matrix 700
STEM	Byte Ahead, alu.
HANDLEBAR	Byte alu. rise 20mm
SEATPOST	Byte alu. 27,2mm
SADDLE	Atala hybrid with hole
TYRES	Byte Padova 700x32

NOTE
Kickstand, reflectors on wheels

HIGHLIGHT
Tkk alloy frames
Alloy suspended fork
Byte alloy triple crankset
Push pull stef41 Shimano shifters

BLACK/YELLOW	
49 - M	0115294203



L'azienda produttrice si riserva il diritto di cambiare immagini, colori, specifiche e prezzi senza preavviso.
The manufacturing company takes the right to change pictures, colors, specs and prices without prior notice.

TREKKING

Salire in sella ad una bicicletta Atala è il modo ideale per apprezzare i paesaggi che ti circondano, per assaporare le delizie delle mete che abbiamo raggiunto, per divertirsi facendo attività a contatto con la natura. Il cicloturismo sempre più diffuso abbina le due ruote alla scoperta di nuovi territori e all'enogastronomia territoriale affinchè il viaggio in bici possa restituire un'esperienza sensoriale.
Leggere, semplici da usare, precise nella frenata e nella cambiata. Telai con geometrie moderne e confortevoli.

Riding an Atala bicycle is the ideal way to appreciate the landscapes that surround you, to savor the delights of the destinations we have reached, to have fun doing activities in contact with nature. The increasingly widespread cycle tourism combines two wheels with the discovery of new territories and local food and wine so that the bike trip can provide a sensory experience.
Lightweight, easy to use, precise in braking and gear shifting. Frames with modern and comfortable geometries.

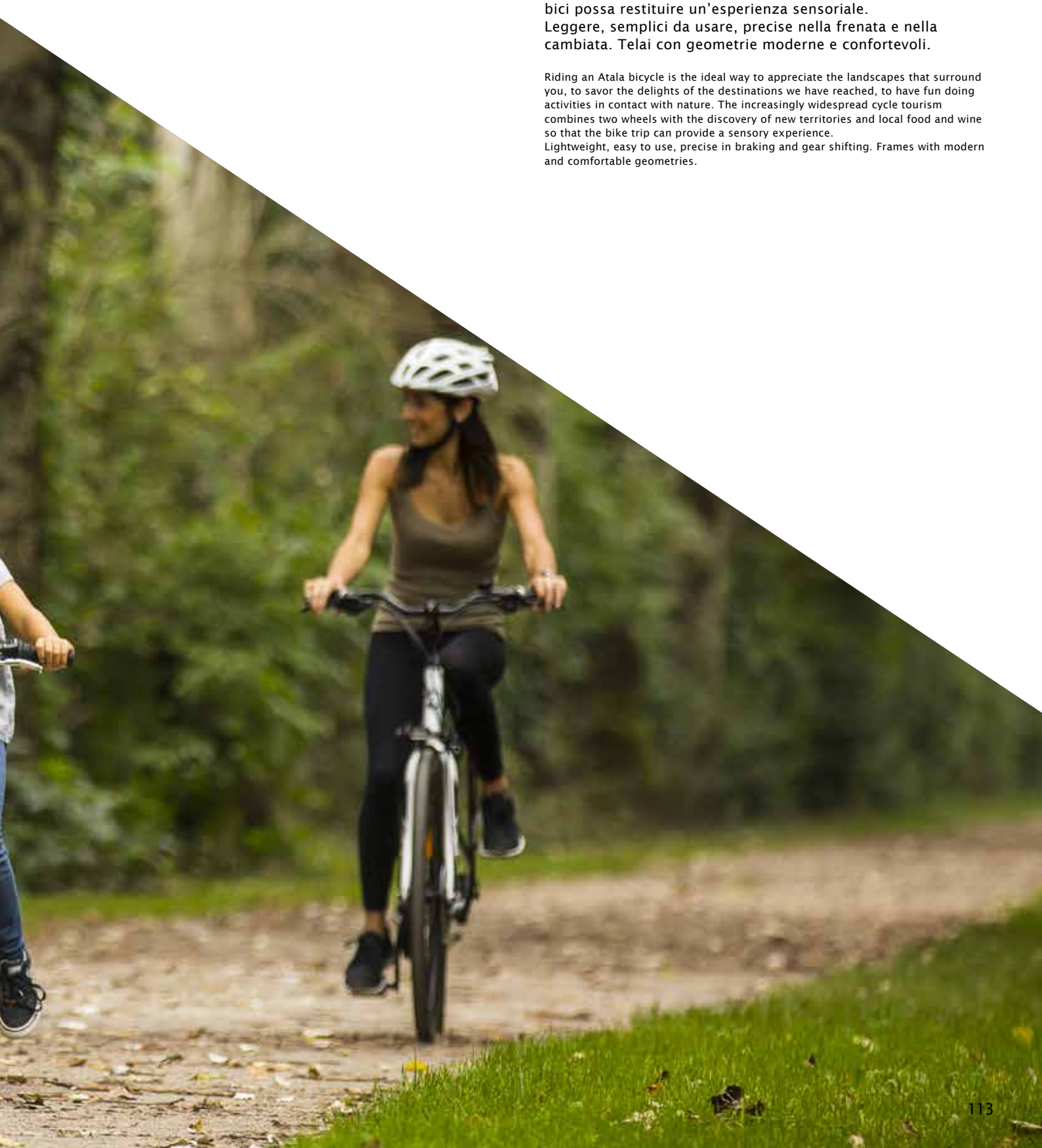

DISCOVERY FS MD 21V MAN



FRAME	Alu. TKK 700c, Post mount disc brake
FORK	Suntour NEX 700c, alu. with alu, crown, 63mm
HEADSET	Integrated 1"1/8 ahead
CRANKSET	Byte Alu. 48/38/28, cartridge BB
REAR DERAILLEUR	Shimano Acera RD-M360 8s
FRONT DERAILLEUR	Shimano Altus FD-M310
SHIFTERS LEVERS	Shimano ST-EF505 8x3s
BRAKES	Shimano BR-M200 hydraulic disc, Rotor SM-RT10 160mm
CASSETTE	Shimano CS-HG200 8s, 12-32T
PEDALS	Steel TKK
HUBS	Shimano TX505 CL, 36h
RIMS	Alu. double wall Disc 36 holes
STEM	Byte ahead alu. Oversize, adjustable
HANDLEBAR	Byte alu. Oversize, rise 25mm, TKK
SEATPOST	Byte alu. 31,6mm
SADDLE	Selle Royal Lancia
TYRES	Schwalbe Delta Cruiser Plus 700x38, puncture proof, reflective line

NOTE
Alu. carrier for 25kg, single stay mudguard, chaincoevr Herrmans, battery lights Spanninga/Herrmans, kickstand adjustable URSUS, bell, ergonomic grips

HIGHLIGHT
Alloy suspended fork
Acera 8 speed F/Derailleur
Hydraulic disc brakes
Push pull shifters

ULTRALIGHT/ANTHRACITE	
49 - M	0115293575
54 - L	0115293585

DISCOVERY FS MD 21V LADY



FRAME	Alu. TKK 700c, Post mount disc brake
FORK	Suntour NEX 700c, alu. with alu, crown, 63mm
HEADSET	Integrated 1"1/8 ahead
CRANKSET	Byte Alu. 48/38/28, cartridge BB
REAR DERAILLEUR	Shimano Acera RD-M360 8s
FRONT DERAILLEUR	Shimano Altus FD-M310
SHIFTERS LEVERS	Shimano ST-EF505 8x3s
BRAKES	Shimano BR-M200 hydraulic disc, Rotor SM-RT10 160mm
CASSETTE	Shimano CS-HG200 8s, 12-32T
PEDALS	Steel TKK
HUBS	Shimano TX505 CL, 36h
RIMS	Alu. double wall Disc 36 holes
STEM	Byte ahead alu. Oversize, adjustable
HANDLEBAR	Byte alu. Oversize, rise 25mm, TKK
SEATPOST	Byte alu. 31,6mm
SADDLE	Selle Royal Lancia
TYRES	Schwalbe Delta Cruiser Plus 700x38, puncture proof, reflective line

NOTE
Alu. carrier for 25kg, single stay mudguard, chaincoevr Herrmans, battery lights Spanninga/Herrmans, kickstand adjustable URSUS, bell, ergonomic grips

HIGHLIGHT
Alloy suspended fork
Acera 8 speed F/Derailleur
Hydraulic disc brakes
Push pull shifters

ANTHRACITE/WHITE	
44 - S	0115307307

DISCOVERY REVO 21V MAN



FRAME	Alu. TKK 700c
FORK	Hi-Ten Tig TKK 700c
HEADSET	Steel 1" 1/8
CRANKSET	Steel 42/34/24, cartridge BB
REAR DERAILLEUR	Shimano Tourney RD-TY300 7s
FRONT DERAILLEUR	Shimano Tourney FD-TY510 31,8mm
SHIFTERS LEVERS	Shimano ST-EF500 EZ Fire Plus 3x7s
BRAKES	Alu. V-brake
FREEWHEEL	Shimano Tourney 7s 14-28
PEDALS	Resin
HUBS	Alu. 36 holes
RIMS	Alu. double wall, 36 holes Byte Matrix 700
STEM	Byte ahead alu. adjustable
HANDLEBAR	Byte steel TKK
SEATPOST	Byte alu. 27,2mm
SADDLE	Selle Royal Wave
TYRES	Byte 700x35

NOTE
Rear carrier, mudguard, chaincover steel, battery lights, spoke reflectors, kickstand, bell

HIGHLIGHT
Alluminio Tkk frame
Alloy triple crankset, cartridge BB
Shimano 21 speed groupset
Dual wall rims

ULTRALIGHT/ANTHRACITE	
49 - M	0115320410
54 - L	0115320460
BLACK/WHITE	
49 - M	0115320400
54 - L	0115320450



DISCOVERY REVO 21V LADY



FRAME	Alu. TKK 700c
FORK	Hi-Ten Tig TKK 700c
HEADSET	Steel 1" 1/8
CRANKSET	Steel 42/34/24, cartridge BB
REAR DERAILLEUR	Shimano Tourney RD-TY300 7s
FRONT DERAILLEUR	Shimano Tourney FD-TY510 31,8mm
SHIFTERS LEVERS	Shimano ST-EF500 EZ Fire Plus 3x7s
BRAKES	Alu. V-brake
FREEWHEEL	Shimano Tourney 7s 14-28
PEDALS	Resin
HUBS	Alu. 36 holes
RIMS	Alu. double wall, 36 holes Byte Matrix 700
STEM	Byte ahead alu. adjustable
HANDLEBAR	Byte steel TKK
SEATPOST	Byte alu. 27,2mm
SADDLE	Selle Royal Wave
TYRES	Byte 700x35

NOTE
Portapacco, parafanghi, carter metallo, impianto luci a batteria, cavalletto, campanello

HIGHLIGHT
Alluminio Tkk frame
Alloy triple crankset, cartridge BB
Shimano 21 speed groupset
Dual wall rims

WHITE/LIGHT BLUE	
44 - S	0115320520
BLACK/NEON RED	
44 - S	0115320510
ANTHRACITE/WHITE	
44 - S	0115320500



DISCOVERY S 21V MAN



FRAME	Alu. TKK 700c
FORK	Hi-Ten Tig TKK 700c
HEADSET	Steel 1" 1/8 threaded, with cap
CRANKSET	Alu. 42/34/24, cartridbe BB
REAR DERAILLEUR	Shimano Tourney RD-TY300 7s
FRONT DERAILLEUR	Shimano Tourney FD-TY510 31,8mm
SHIFTERS LEVERS	Shimano ST-EF500 EZ Fire Plus 3x7s
BRAKES	Alu. V-brake
FREEWHEEL	Shimano Tourney 7s 14-28
PEDALS	Alu.
HUBS	Alu. 36 holes
RIMS	Alu. double wall, 36 holes Byte Matrix 700
STEM	Byte ahead alu. adjustable
HANDLEBAR	Byte steel TKK
SEATPOST	Byte alu. 27,2mm
SADDLE	Selle Royal Wave
TYRES	Byte 700x35

NOTE
Rear carrier, mudguard, chaincover steel, battery lights, spoke reflectors, kickstand, bell

HIGHLIGHT
Alloy triple crankset, cartridge BB
Shimano 7 speed F/Derailleur
Push pull stef500 shifters
Alloy pedals

ULTRALIGHT/ANTHRACITE	
49 - M	0115293705
54 - L	0115293715
BLACK/WHITE	
54 - L	0115293710
59 - XL	0115293720



DISCOVERY S 21V LADY



FRAME	Alu. TKK 700c
FORK	Hi-Ten Tig TKK 700c
HEADSET	Steel 1" 1/8 threaded, with cap
CRANKSET	Alu. 42/34/24, cartridbe BB
REAR DERAILLEUR	Shimano Tourney RD-TY300 7s
FRONT DERAILLEUR	Shimano Tourney FD-TY510 31,8mm
SHIFTERS LEVERS	Shimano ST-EF500 EZ Fire Plus 3x7s
BRAKES	Alu. V-brake
FREEWHEEL	Shimano Tourney 7s 14-28
PEDALS	Alu.
HUBS	Alu. 36 holes
RIMS	Alu. double wall, 36 holes Byte Matrix 700
STEM	Byte ahead alu. adjustable
HANDLEBAR	Byte steel TKK
SEATPOST	Byte alu. 27,2mm
SADDLE	Selle Royal Wave
TYRES	Byte 700x35

NOTE
Rear carrier, mudguard, chaincover steel, battery lights, spoke reflectors, kickstand, bell

HIGHLIGHT
Alloy triple crankset, cartridge BB
Shimano 7 speed F/Derailleur
Push pull stef500 shifters
Alloy pedals

WHITE/LIGHT BLUE	
44 - S	0115293805
BLACK/NEON RED	
44 - S	0115293803
49 - M	0115293813
ANTHRACITE/WHITE	
44 - S	0115293800





BOSTON 6V MAN



FRAME	Hi-Ten Tig TKK 700c
FORK	Hi-Ten Tig TKK 700c
HEADSET	Steel 1" 1/8 threaded, with cap
CRANKSET	Steel 42, cartridge BB
REAR DERAILLEUR	Shimano Tourney RD-TZ50 6s
SHIFTERS LEVERS	Shimano Tourney SL-RS36 RevoShift 6s
BRAKES	Alu. V-brake
FREEWHEEL	Shimano Tourney 6s 14-28
PEDALS	Resin
HUBS	Alu. 36 holes
RIMS	Alu. double wall, 36 holes Byte Matrix 700
STEM	Byte alu. adjustable
HANDLEBAR	Byte steel TKK
SEATPOST	Steel no clamp 25,4mm
SADDLE	Selle Royal Wave
TYRES	700x35

NOTE
Rear carrier, mudguard, chaincover steel, battery lights, headset cap, kickstand, bell

HIGHLIGHT
Shimano 6 speed R/Derailleur
Alloy adjustable stem
SR saddle
Dual wall rims

BLACK MATT	
49 - M	0115305300

TREKKING

BOSTON 6V LADY



FRAME	Hi-Ten Tig TKK 700c
FORK	Hi-Ten Tig TKK 700c
HEADSET	Steel 1" 1/8 threaded, with cap
CRANKSET	Steel 42, cartridge BB
REAR DERAILLEUR	Shimano Tourney RD-TZ50 6s
SHIFTERS LEVERS	Shimano Tourney SL-RS36 RevoShift 6s
BRAKES	Alu. V-brake
FREEWHEEL	Shimano Tourney 6s 14-28
PEDALS	Resin
HUBS	Alu. 36 holes
RIMS	Alu. double wall, 36 holes Byte Matrix 700
STEM	Byte alu. adjustable
HANDLEBAR	Byte steel TKK
SEATPOST	Steel no clamp 25,4mm
SADDLE	Selle Royal Wave
TYRES	700x35

NOTE
Rear carrier, mudguard, chaincover steel, battery lights, headset cap, kickstand, bell

HIGHLIGHT
Shimano 6 speed R/Derailleur
Alloy adjustable stem
SR saddle
Dual wall rims

GRAY	
44 - S	0115305400

DUE



FRAME	Hi-Ten Tig tandem
FORK	Suspended with Alu. crown
HEADSET	Steel 1" 1/8 threaded, with cap
CRANKSET	Steel 42/34/24, cartridge BB
REAR DERAILLEUR	Shimano Tourney RD- TX800 7s
FRONT DERAILLEUR	Shimano Tourney FD-TX500 31,8mm
SHIFTERS LEVERS	Shimano ST-EF500 EZ Fire Plus 3x7s
BRAKES	Alu. V-brake
FREEWHEEL	Shimano Tourney 7s 14-28
PEDALS	Resin anti-slep
HUBS	Alu. 36 holes
RIMS	Alu. double wall, 36 holes Byte Matrix
STEM	Alu adjustable
HANDLEBAR	Steel TKK
SEATPOST	Alu. 28,6mm
SADDLE	Selle Royal Wave/Atala
TYRES	Byte Ortles 26x1,50

NOTE
Rear carrier, mudguard, chaincover, battery lights, kickstand, bell

HIGHLIGHT
Suspended fork
Shimano 7 speed R/Derailleur
Alloy adjustable stems
Dual wall Byte rims

ULTRALIGHT/BLUE	
49 - M	0115240150

URBAN

La scelta perfetta per chi sceglie di muoversi con agilità e comfort nel traffico urbano.

The perfect choice for those who choose to move with agility and comfort in urban traffic.



L'azienda produttrice si riserva il diritto di cambiare immagini, colori, specifiche e prezzi senza preavviso.
The manufacturing company takes the right to change pictures, colors, specs and prices without prior notice.

URBAN

CITTÀ LADY



FRAME	Hi-Ten Tig 26" with conjunctions
FORK	Hi-Ten Tig City 26"
HEADSET	Acciaio 1" filettata
CRANKSET	Acciaio 42T
BRAKES	A bacchetta con pistoncino
CASSETTE	1s, 18T
PEDALS	Viaggio gomma nera
HUBS	Alluminio, 36 fori
RIMS	Ambrosio alluminio tipo R, 36 fori
STEM	Integrato con manubrio
HANDLEBAR	Viaggio, cromata, per freni a bacchetta
SEATPOST	Acciaio a candela 25,4mm
SADDLE	Viaggio, con molle
TYRES	26"x1"3/8 B/N

NOTE
Rear carrier, front carrier, steel mudguard, steel closed chaincover, lights with dynamo, kickstand, arched lock

HIGHLIGHT
Telaio City frame, 26" wheel
Classic R brake system
Dynamo lights
Metal mudguard and chaincover

BLACK	
51	0115116700

COLLEGE



FRAME	Hi-Ten Tig Olanda 26"
FORK	Hi-Ten Tig Olanda 26"
HEADSET	Acciaio 1" filettata
CRANKSET	Acciaio 42T
BRAKES	Alluminio V-brake
CASSETTE	1s, 18T
PEDALS	Resina
HUBS	Acciaio, 36 fori
RIMS	Alluminio, 36 fori
STEM	Acciaio a gambo
HANDLEBAR	Acciaio city, rise 60
SEATPOST	Acciaio 25,4mm
SADDLE	Sella Olanda con elastomeri
TYRES	26"x1"3/8 city

NOTE
Rear carrier, front carrier, steel mudguard, steel chaincover, dress guard, battery lights, spoke reflectors, kickstand, maxi bell

HIGHLIGHT
Holland frame for 26" wheel
Front and rear carrier
Battery lights
metal mudguard and chain cover

BLACK	
43	0115304100
SILVER	
43	0115304130



COLLEGE 24”



FRAME	Hi-Ten Tig Olanda 24"
FORK	Hi-Ten Tig Olanda 24"
HEADSET	Acciaio 1" filettata
CRANKSET	Acciaio 42T
BRAKES	Alluminio V-brake
CASSETTE	1s, 18 denti
PEDALS	Resina
HUBS	Acciaio, 36 fori
RIMS	Alluminio, 36 fori
STEM	Acciaio a gambo
HANDLEBAR	Acciaio city, rise 60
SEATPOST	Acciaio 25,4mm
SADDLE	Sella Olanda con elastomeri
TYRES	24"x1"3/8 city

NOTE
Rear carrier, front carrier, steel mudguard, steel chaincover, dress guard, battery lights, spoke reflectors, kickstand, maxi bell

HIGHLIGHT
Holland frame for 26" wheel
Front and rear carrier
Battery lights
Metal mudguard and chain cover

BLACK	
43	0115306000

URBAN

MAGGIE 7V



FRAME	Hi-Ten Tig ad accesso facilitato 24"
FORK	Hi-Ten Tig City 24"
HEADSET	Acciaio 1" filettata, con cappuccio
CRANKSET	Acciaio 38T, movimento a cartuccia
REAR DERAILLEUR	Shimano Tourney RD-TY300 7s
SHIFTERS LEVERS	Shimano Tourney SL-RS36 RevoShift 7s
BRAKES	Alluminio V-brake
CASSETTE	Shimano Tourney 7s 14-28
PEDALS	Resina
HUBS	Alluminio, 36 fori
RIMS	Alluminio, 36 fori
STEM	Alluminio, regolabile
HANDLEBAR	Acciaio city
SEATPOST	Acciaio 25,4mm
SADDLE	Selle Royal Wave
TYRES	24x1,75 B/W

NOTE
Rear carrier, front carrier, steel mudguard, steel chaincover, battery lights, spoke reflectors, kickstand, bell

HIGHLIGHT
Easy entry steel frame for 24" wheel
Shimano 7 speed R/Derailleur
Shimano revo shifters
Alloy adjustable handlebar stem

	WHITE/FUCSIA
42	0115305900

URBAN

GRIFONE 7V



FRAME	Hi-Ten Tig entry access 26x1,5"
FORK	Hi-Ten Tig City 26x1,5"
HEADSET	Steel 1" threaded, with cap
CRANKSET	Steel 38T, cartridge BB
REAR DERAILLEUR	Shimano Tourney RD-TY300 7s
SHIFTERS LEVERS	Shimano Tourney SL-RS36 RevoShift 7s
BRAKES	Alu. V-brake
FREEWHEEL	Shimano Tourney 7s 14-28
PEDALS	Resin
HUBS	Alu. 36 holes
RIMS	Alu. 36 holes
STEM	Alu. Adjustable
HANDLEBAR	Steel city
SEATPOST	Steel 28,6mm
SADDLE	Selle Royal Wave
TYRES	26"x1,50"

NOTE
Rear carrier, front carrier, mudguard, steel chaincover, battery lights, spoke reflectors, kickstand, bell

HIGHLIGHT
Shimano 7 speed R/Derailleur
Shimano revo shifters
Alloy stem
SR Wave/Atala saddle

BLACK/FUCSIA	
42	0115305700

URBAN

GREENBAY



FRAME	Steel 20" folding
FORK	Hi-Ten Tig 20"
HEADSET	Steel 1"1/8 threaded
CRANKSET	Steel 48T
REAR DERAILLEUR	Shimano Tourney RD-TY21 SS 6s
SHIFTERS LEVERS	Shimano Tourney SL-RS35 Revo Shifter 6s
BRAKES	Alu. V-brake
FREEWHEEL	Shimano Tourney 6s 14-28
PEDALS	Folding
HUBS	Steel, 36 holes
RIMS	Alu. 36 holes
STEM	Steel. folding and telescopic
HANDLEBAR	Steel flat
SEATPOST	Steel 27,2 x 500mm
SADDLE	MTB Atala
TYRES	Kenda 20"x1,95

NOTE
Rear carrier, mudguard, kickstand, bell, reflectors

HIGHLIGHT
Folding frame, 20" wheel
Shimano 6 speed R/Derailleur
Comandi Shimano revo
Folding & telescopic stem

	RED/SILVER
31	0115320600

TENDER 20” 21V



FRAME	Alluminio 20" con cerniera
FORK	Hi-Ten Tig 20"
HEADSET	Acciaio 1" 1/8 ahead
CRANKSET	Alluminio 48/38/28
REAR DERAILLEUR	Shimano Tourney RD-TY300 7s
FRONT DERAILLEUR	Shimano Tourney FD-TY510 34,9mm
SHIFTERS LEVERS	Shimano Tourney SL-RS36 RevoShift 7x3s
BRAKES	Alluminio V-brake
FREEWHEEL	Shimano Tourney 7s 14-28
PEDALS	Alluminio/resina pieghevoli
HUBS	Alluminio, 36 fori
RIMS	Alluminio doppia camera, 36 fori
STEM	Alluminio, ripiegabile e telescopico
HANDLEBAR	Alluminio flat
SEATPOST	Alluminio 27,2 x 400mm
SADDLE	Selle Royal Mach
TYRES	Byte Este 20"x1,75

NOTE
Reflectors, kickstand, bell, closing magnet

HIGHLIGHT
Folding alloy frame, 20" wheel
Shimano 7 speed R/Derailleur
Triple alloy crankset
Alloy folding pedals

BLACK/NEON YELLOW	
35	0115293400

URBAN

BLUE LAKE



FRAME	Alluminio 20" con cerniera
FORK	Hi-Ten Tig 20"
HEADSET	Acciaio 1"1/8 filettata
CRANKSET	Acciaio 48T
REAR DERAILLEUR	Shimano Tourney RD-TX50 6s
SHIFTERS LEVERS	Shimano Tourney SL-RS35 Revo Shifter 6s
BRAKES	Alluminio V-brake
FREEWHEEL	Shimano Tourney 6s 14-28
PEDALS	Pieghevoli
HUBS	Acciaio, 36 fori
RIMS	Alluminio, 36 fori
STEM	Acciaio, pieghevole e telescopico
HANDLEBAR	Acciaio flat
SEATPOST	Acciaio 27,2 x 500mm
SADDLE	MTB Atala
TYRES	Kenda 20"x1,95

NOTE
Rear carrier, mudguard, rear reflector

HIGHLIGHT
Folding alloy frame with 20" wheel
Shimano 6 speed F/Derailleur
Comandi Shimano revo
Folding & telescopic handlebar stem, folding pedals

BLACK/ORANGE	
33	0115292600



L'azienda produttrice si riserva il diritto di cambiare immagini, colori, specifiche e prezzi senza preavviso.
The manufacturing company takes the right to change pictures, colors, specs and prices without prior notice.

MTB

Velocità, leggerezza e reattività. I telai delle MTB Atala sono progettati per assicurare la massima trasmissione di potenza offrendo stabilità e precisione di guida.

Speed, lightness and reactivity. Atala MTB frames are designed to ensure maximum power transmission, providing stability and driving precision.



SNAP 29” 24V HD



FRAME	Alu. 29", integrated headset
FORK	Suspended 29" 100mm, alu. with alu. crown, 28,6mm stanchions, with MLO (mechanical lock out)
HEADSET	Integrated 1"1/8
CRANKSET	Alu. 42/34/24, cartridge BB
REAR DERAILLEUR	Shimano Altus RD-M310 8s
FRONT DERAILLEUR	Shimano Tourney FD-TY700 31,8mm
SHIFTERS LEVERS	Shimano ST-EF505 EZ Fire Plus 8x3s
BRAKES	Shimano BR-MT200 hydraulic Disc brake, Rotor 160mm CL
CASSETTE	Shimano Altus RD-M310 8s
PEDALS	Resin/steel
HUBS	Shimano TX505, 36 holes, disc center lock
RIMS	Alu. 29" double wall 36 holes, Byte Ortles
STEM	Byte alu. oversize
HANDLEBAR	Byte alu. 720mm, oversize, flat
SEATPOST	Byte alu. 27,2mm
SADDLE	Atala MTB with protections
TYRES	Byte Funes 29x2,125

HIGHLIGHT
Shimano Altus 8 speed R/Derailleur
Alu triple crankset
Shimano hydraulic disc brakes
Alu fork with lock

BLACK/ORANGE	
17 - S	0115306100
19 - M	0115306110
21 - L	0115306120

SNAP 29” 21V MD



FRAME	Alu. 29", integrated headset
FORK	Suspended 29" 100mm, alu. with alu. crown, 28,6mm stanchions, with MLO (mechanical lock out)
HEADSET	Integrated 1"1/8
CRANKSET	Steel 42/34/24, cartridge BB
REAR DERAILLEUR	Shimano Tourney RD-TY300 7s
FRONT DERAILLEUR	Shimano Tourney FD-TY300 31,8mm
SHIFTERS LEVERS	Shimano ST-EF41 EZ Fire Plus 7x3s
BRAKES	Clarks Mechanical Disc, Rotor 160mm
FREEWHEEL	Shimano Tourney 7s 14-28
PEDALS	Resin
HUBS	Alu. 36 holes, disc international
RIMS	Alu. 29" double wall 36 holes, Byte Ortles
STEM	Byte alu. oversize
HANDLEBAR	Byte alu. 720mm, oversize, flat
SEATPOST	Byte alu. 27,2mm
SADDLE	Atala MTB with protections
TYRES	Byte Funes 29x2,125

HIGHLIGHT
Shimano 7 speed R/Derailleur
Shimano push pull shifters
Disc brakes
Alu fork with lock

BLACK/YELLOW	
17 - S	0115306200
19 - M	0115306210
21 - L	0115306220
ULTRALIGHT/ANTHRACITE	
17 - S	0115306205
19 - M	0115306215
21 - L	0115306225

WAP 27,5” 24V HD



FRAME	Alu. 27,5, integrated headset
FORK	Suspended 27,5" 100mm, alu. with alu. crown, 28,6mm stanchions, with MLO (mechanical lock out)
HEADSET	Integrated 1"1/8
CRANKSET	Alu. 42/34/24, cartridge BB
REAR DERAILLEUR	Shimano Altus RD-M310 8s
FRONT DERAILLEUR	Shimano Tourney FD-TY700 31,8mm
SHIFTERS LEVERS	Shimano ST-EF505 EZ Fire Plus 8x3s
BRAKES	Shimano BR-MT200 hydraulic Disc brake, Rotor 160mm CL
CASSETTE	Shimano Altus RD-M310 8s
PEDALS	Resin/steel
HUBS	Shimano TX505, 36 holes, disc center lock
RIMS	Alu. 27,5" double wall 36 holes, Byte Ortles
STEM	Byte alu. oversize
HANDLEBAR	Byte alu. 720mm, oversize, flat
SEATPOST	Byte alu. 27,2mm
SADDLE	Atala MTB with protections
TYRES	Byte Funes 27,5x1,95

HIGHLIGHT
Shimano Altus 8 speed R/Derailleur
Alu triple crankset
Shimano hydraulic disc brakes
Alu fork with lock

BLACK/YELLOW	
S	0115306300
M	0115306310
L	0115306320

RACE PRO 27,5” MD



FRAME	Alu hydroformed 27,5"
FORK	Suspended 27,5" Disk
HEADSET	1"1/8 Ahead
CRANKSET	Alu. 42/34/24, cartridge BB
REAR DERAILLEUR	Shimano Tourney RD-TY300 7s
FRONT DERAILLEUR	Shimano Tourney FD-TY500 31,8mm
SHIFTERS LEVERS	Shimano ST-EF510 EZ Fire Plus 7x3s
BRAKES	Shimano BR-TX805 mechnical disc, Rotor 160mm
FREEWHEEL	Shimano Tourney 7s 14-28
PEDALS	Resin
HUBS	Alu. 36 holes, disc international
RIMS	Alu. 27,5" double wall 36 holes
STEM	Ahead steel
HANDLEBAR	Steel, rise 30mm
SEATPOST	Alu. 27,2mm
SADDLE	Atala MTB
TYRES	Kenda 27,5x2,10

HIGHLIGHT
Alloy hydroformed frame 27,5" with integrated head set
Shimano push pull shifters
Shimano disc brakes
Disc dual wall wheel

BLACK/GREEN	
33	0115291605
ORANGE/BLACK	
33	0115291600



REPLAY 27,5” MD



FRAME	Alu. 27,5, integrated headset
FORK	HL CH-386A 27,5"
HEADSET	Integrated 1"1/8
CRANKSET	Steel 42/34/24, cartridge BB
REAR DERAILLEUR	Shimano Tourney RD-TY300 7s
FRONT DERAILLEUR	Shimano Tourney FD-TY300 31,8mm
SHIFTERS LEVERS	Shimano ST-EF41 EZ Fire Plus 7x3s
BRAKES	Clarks Mechanical Disc, Rotor 160mm
FREEWHEEL	Shimano Tourney 7s 14-28
PEDALS	Resin
HUBS	Alu. 36 holes, disc international
RIMS	Alu. 27,5" double wall 36 holes, Byte Ortles
STEM	Byte Ahead steel
HANDLEBAR	Byte steel rise 30mm
SEATPOST	Byte alu. 27,2mm
SADDLE	Atala MTB with protections
TYRES	Byte Funes MTB 27,5x1,95

HIGHLIGHT
Alloy frame 27,5" with integrated head set
Shimano push pull shifters
Disc brakes
Ortles disc dual wall wheel

GREEN/BLACK	
S	0115291000
M	0115291010
L	0115291020
ULTRALIGHT/RED	
S	0115291005
M	0115291015
L	0115291025



REPLAY 27,5” VB



FRAME	Alu. 27,5, integrated headset
FORK	HL CH-386A 27,5"
HEADSET	Integrated 1"1/8
CRANKSET	Steel 42/34/24, cartridge BB
REAR DERAILLEUR	Shimano Tourney RD-TY300 7s
FRONT DERAILLEUR	Shimano Tourney FD-TY300 31,8mm
SHIFTERS LEVERS	Shimano ST-EF41 EZ Fire Plus 7x3s
BRAKES	Alu. V-brake
FREEWHEEL	Shimano Tourney 7s 14-28
PEDALS	Resin
HUBS	Alu. 36 holes
RIMS	Alu. 27,5 double wall 36 holes Byte Matrix
STEM	Byte Ahead steel
HANDLEBAR	Byte steel, rise 30mm
SEATPOST	Byte alu. 27,2mm
SADDLE	Atala MTB with protections
TYRES	Byte Funes MTB 27,5x1,95

HIGHLIGHT
Alloy frame 27,5" with integrated head set
Shimano push pull shifters
Byte dual wall rims
MTB Atala whit hole saddle

BLACK/ORANGE	
S	0115291105
M	0115291115
L	0115291125
BLACK/YELLOW	
S	0115291100
M	0115291110
L	0115291120



STARFIGHTER 27,5” MD



FRAME	Hi-Ten Tig 27,5"
FORK	HL CH-386 27,5"
HEADSET	1"1/8 Ahead
CRANKSET	Steel 42/34/24, cartridge BB
REAR DERAILLEUR	Shimano Tourney RD-TY300 7s
FRONT DERAILLEUR	Shimano Tourney FD-TZ500 28,6mm
SHIFTERS LEVERS	Shimano ST-EF41 EZ Fire Plus 7x3s
BRAKES	Alu. V-brake
FREEWHEEL	Shimano Tourney 7s 14-28
PEDALS	Resin
HUBS	Alu. 36 holes
RIMS	Alu. 27,5 double wall 36 holes Byte Matrix
STEM	Byte Ahead steel
HANDLEBAR	Byte steel, rise 30mm
SEATPOST	Byte alu. 25,4mm
SADDLE	Atala MTB with protections
TYRES	Byte Funes MTB 27,5x1,95

BLACK/ORANGE	
S	0115291205
M	0115291215
L	0115291225
BLACK/YELLOW	
S	0115291200
M	0115291210
L	0115291220
BLACK/FUCHSIA	
S	0115295000
M	0115295010





MY FLOWER 27,5”



FRAME	Hi-Ten Tig Lady 27,5"
FORK	HL CH-386 27,5"
HEADSET	1"1/8 Ahead
CRANKSET	Steel 42/34/24, cartridge BB
REAR DERAILLEUR	Shimano Tourney RD-TY300 7s
FRONT DERAILLEUR	Shimano Tourney FD-TZ500 28,6mm
SHIFTERS LEVERS	Shimano Tourney SL-RS35 RevoShift 7x3s
BRAKES	Alu. V-brake
FREEWHEEL	Shimano Tourney 7s 14-28
PEDALS	Resin
HUBS	Alu. 36 holes
RIMS	Alu.27,5 double wall 36 holes Byte Matrix
STEM	Byte Ahead steel
HANDLEBAR	Byte steel, rise 30mm
SEATPOST	Byte alu. 25,4mm
SADDLE	Atala MTB with protections
TYRES	Byte Funes MTB 27,5x1,95

WHITE/FUCSIA	
43	0115291300

RACE COMP 26” BOY



FRAME	Alu. 26", integrated headset
FORK	Suspended 26"
HEADSET	Integrated 1"1/8
CRANKSET	Steel 42/34/24
REAR DERAILLEUR	Shimano Tourney RD-TY21GS 6s
SHIFTERS LEVERS	Shimano ST-EF41 EZ Fire Plus 6x3s
BRAKES	Alu. V-brake
FREEWHEEL	Shimano Tourney 6s 14-28
PEDALS	Resin
HUBS	Steel 36 holes
RIMS	Alu. 26, 36 holes
STEM	Ahead steel
HANDLEBAR	Steel rise 30mm
SEATPOST	Alu. 27,2mm
SADDLE	Atala MTB
TYRES	MTB 26x1,95

HIGHLIGHT
Alloy frame 26", integrated head set
Shimano 6 speed R/Derailleur
Shimano push pull shifters
Suspended fork

NEON RED/WHITE MATT	
36	0115291700

RACE COMP 26” GIRL



FRAME	Alu .26" lady, integrated headset
FORK	Suspended 26"
HEADSET	Integrata 1"1/8
CRANKSET	Steel 42/34/24
REAR DERAILLEUR	Shimano Tourney RD-TY21GS 6s
SHIFTERS LEVERS	Shimano ST-EF41 EZ Fire Plus 6x3s
BRAKES	Alu. V-brake
FREEWHEEL	Spark 6s 14-28
PEDALS	Resin
HUBS	Steel 36 holes
RIMS	Alu. 26, 36 holes
STEM	Ahead steel
HANDLEBAR	Steel rise 30mm
SEATPOST	Alu. 27,2mm
SADDLE	Atala MTB
TYRES	MTB 26x1,95

HIGHLIGHT
Alloy frame 26", integrated head set
Shimano 6 speed R/Derailleur
Shimano push pull shifters
Suspended fork

FUCSIA/LIGHT BLUE	
36	0115291800

BLISTER 29”



FRAME	Hi-Ten Tig 29"
FORK	Suspended 29" 50mm
HEADSET	1"1/8 Ahead
CRANKSET	Steel 42/34/24
REAR DERAILLEUR	Shimano Tourney RD-TY300 7s
SHIFTERS LEVERS	Shimano SL-RS35 Revo Shifter 7x3s
BRAKES	Alu. V-brake
FREEWHEEL	Shimano Tourney 7s 14-28
PEDALS	Resin
HUBS	Steel 36 holes
RIMS	Alu. 29 double wall 36 holes
STEM	Ahead steel
HANDLEBAR	Steel, rise 30mm
SEATPOST	Alu, no clamp 25,4mm
SADDLE	Atala MTB
TYRES	Kenda 29x2,10 MTB

HIGHLIGHT
Steel frame 29"
Shimano 7 speed R/Derailleur
MTB triple crankset
Alloy V brakes

BLACK/RED	
46	0115294100

STATION 27,5”



FRAME	Hi-Ten Tig 27,5"
FORK	Suspended 27,5"
HEADSET	1"1/8 Ahead
CRANKSET	Steel 42/34/24
REAR DERAILLEUR	Shimano Tourney RD-TY300 7s
SHIFTERS LEVERS	Shimano ST-EF41 EZ Fire Plus 7x3s
BRAKES	Alu. V-brake
FREEWHEEL	Shimano Tourney 7s 14-28
PEDALS	Resin
HUBS	Steel 36 holes
RIMS	Alu. 27,5 double wall 36 holes
STEM	Ahead steel
HANDLEBAR	Steel, rise 30mm
SEATPOST	Alu, no clamp 25,4mm
SADDLE	Atala MTB
TYRES	Kenda 27,5x2,10 MTB

HIGHLIGHT
Alloy frame 27,5"
Shimano push pull shifters
Shimano 7 speed F/Derailleur
Alloy V brakes

BLACK/RED	
L	0115279220
YELLOW/BLACK	
M	0115279215
L	0115279225



PANTHER VB



FRAME	Hi-Ten Tig suspended 26"
FORK	Suspended
REAR SHOCK	By spring D.24x150x45mm
HEADSET	1"1/8 Ahead
CRANKSET	Steel 42/34/24
REAR DERAILLEUR	Shimano Tourney RD-TX35 7s
SHIFTERS LEVERS	Shimano ST-EF41 EZ Fire Plus 7x3s
BRAKES	Alu. V-brake
FREEWHEEL	Shimano Tourney 7s 14-28
PEDALS	Resin
HUBS	Steel 36 holes
RIMS	Alu. 26 double wall 36 holes
STEM	Ahead steel
HANDLEBAR	Steel rise 30mm
SEATPOST	Steel no clamp 25,4mm
SADDLE	Atala MTB
TYRES	Kenda 26"x1,95 MTB

GREEN/ANTHRACITE	
XS	0115279500
M	0115279510

SUNRISE



FRAME	Hi-Ten Tig Lady 26"
FORK	Hi-Ten Tig MTB 1"
HEADSET	Steel 1"
CRANKSET	Steel 42/34/24
REAR DERAILLEUR	Shimano Tourney RD-TZ50 7s
SHIFTERS LEVERS	Shimano SL-RS35 Revo Shifter 6x3s
BRAKES	Alu. V-brake
FREEWHEEL	Shimano Tourney 6s 14-28
PEDALS	Resin
HUBS	Steel 36 holes
RIMS	Alu. 36 holes
STEM	Quill steel
HANDLEBAR	Steel, rise 30mm
SEATPOST	Steel no clamp 25,4mm
SADDLE	Atala MTB
TYRES	Kenda 26x1,95 MTB

HIGHLIGHT
Alloy frame 26"
Shimano 6 speed R/Derailleur
Alloy V brakes

	WHITE/FUCHSIA
43	0115291900
	BLACK/FUCHSIA
43	0115244905



BMX

Paraboliche, salti, drifting per i bambini più scatenati, sempre nel rispetto della sicurezza.

Parabolics, jumps, drifting for the most wild children, always respecting safety.



L'azienda produttrice si riserva il diritto di cambiare immagini, colori, specifiche e prezzi senza preavviso.
The manufacturing company takes the right to change pictures, colors, specs and prices without prior notice.

CRIME



FRAME	Hi-Ten Tig BMX
FORK	Hi-Ten Tig BMX
HEADSET	Steel 1", with rotor
CRANKSET	Steel 44T, one piece
BRAKES	Alu. V-brake
FREEWHEEL	1s, 18T
PEDALS	BMX resin
HUBS	Steel 36 holes, pegs 3/8"
RIMS	Alu. 36 holes
STEM	Alu.
HANDLEBAR	Steel with crossbar
SEATPOST	Steel 25,4mm
SADDLE	Atala BMX
TYRES	BMX 20"x1,95

HIGHLIGHT
Handlebar with crossbar
V brakes
Rotor
Pegs

BLACK/YELLOW	
28	0115292100
GREEN/BLACK	
28	0115292103
ORANGE/BLACK	
28	015292106



JUNIOR

Avvicinare i bambini alle due ruote è un'ottima scelta perché rappresenta un investimento di salute per il loro futuro. Atala realizza bici con ruote da 12'' a 24''per ciascuna età; ad ognuno la sua!

Approaching children to ride a bicycle is a good choice because it represents a good health investment for their future. Atala makes bicycles with wheels fron 12'' to 24'' for each age; to each his own!



L'azienda produttrice si riserva il diritto di cambiare immagini, colori, specifiche e prezzi senza preavviso.
The manufacturing company takes the right to change pictures, colors, specs and prices without prior notice.

JUNIOR

RACE PRO 24” HD



FRAME	Alluminio idroformato 24", sterzo integrato
FORK	Suntour XCT 24" alluminio
HEADSET	Integrata 1"1/8
CRANKSET	Acciaio 42/34/24, movimento a cartuccia
REAR DERAILLEUR	Shimano Tourney RD-TY300 7V
SHIFTERS LEVERS	Shimano SL-M310
BRAKES	Shimano BR-M315 disco idraulico, Rotor INT
FREEWHEEL	Shimano Tourney 7V 14-28
PEDALS	Resina MTB
HUBS	Alluminio 36 fori INT
RIMS	Alluminio, 36 fori
STEM	Ahead acciaio
HANDLEBAR	Acciaio, rise 30mm
SEATPOST	Alluminio 27,2mm con collarino
SADDLE	Atala Junior
TYRES	Kenda 24x1,95

HIGHLIGHT
Alloy hydroformed frame 24" with integrated head set
Shimano push pull SL-M310
Shimano hydraulic disc brakes
Suntour suspended fork

BLACK/GREEN	
33	0115293200

JUNIOR

STORM MD



FRAME	Hi-Ten Tig suspended
FORK	Suspended
REAR SHOCK	by spring D.24x120x45mm
HEADSET	Steel 1"1/8
CRANKSET	Steel 42/34/24
REAR DERAILLEUR	Shimano Tourney RD-TY300 7s
SHIFTERS LEVERS	Shimano Tourney SL-RS35 RevoShift
BRAKES	Mechanical disc, Rotor 160mm
FREEWHEEL	Shimano Tourney 7s 14-28
PEDALS	Resin MTB
HUBS	Steel, 36 holes
RIMS	Alu. 36 holes
STEM	Steel
HANDLEBAR	Steel rise 30mm
SEATPOST	Steel 25,4mm
SADDLE	Atala Junior
TYRES	Kenda 24"x1,95

HIGHLIGHT
Suspended frame
Shimano 7 speed F/Derailleur
Disc brakes

BLACK/YELLOW/RED	
31	0115292900
ORANGE/BLACK	
31	0115294400



JUNIOR

STORM VB



FRAME	Hi-Ten Tig suspended
FORK	Suspended
REAR SHOCK	by spring D.24x120x45mm
HEADSET	Steel 1"1/8
CRANKSET	Steel 42/34/24
REAR DERAILLEUR	Shimano Tourney RD-TY300 7s
SHIFTERS LEVERS	Shimano Tourney SL-RS35 RevoShift
BRAKES	Alu. V-brake
FREEWHEEL	Shimano Tourney 7s 14-28
PEDALS	Resin MTB
HUBS	Steel, 36 holes
RIMS	Alu. 36 holes
STEM	Steel
HANDLEBAR	Steel rise 30mm
SEATPOST	Steel 25,4mm
SADDLE	Atala Junior
TYRES	Kenda 24"x1,95

HIGHLIGHT
Suspended frame
Shimano 7 speed F/Derailleur
Alloy V brakes

	YELLOW/BLACK
31	0115292800

RACE COMP 24” BOY



FRAME	Alu. 24"
FORK	Suspended
HEADSET	1" 1/8 Ahead
CRANKSET	Steel 42/34/24
REAR DERAILLEUR	Shimano Tourney RD-TY21GS 6s
SHIFTERS LEVERS	Shimano Tourney SL-RS35 RevoShift
BRAKES	Alu. V-brake
FREEWHEEL	Shimano Tourney 6s 14-28
PEDALS	Resin MTB
HUBS	Steel, 36 holes
RIMS	Alu. 36 holes
STEM	Ahead steel
HANDLEBAR	Steel, rise 30mm
SEATPOST	Alu. 27,2mm with clamp
SADDLE	Atala Junior
TYRES	Kenda 24x1,95

HIGHLIGHT
Allo frame
Shimano R/Derailleur 18 speed
Alloy V brake
Suspended fork

BLACK/ORANGE	
33	0115293100

JUNIOR

RACE COMP 24” BOY



FRAME	Alu. girl 24"
FORK	Suspended
HEADSET	1" 1/8 Ahead
CRANKSET	Steel 42/34/24
REAR DERAILLEUR	Shimano Tourney RD-TY21GS 6s
SHIFTERS LEVERS	Shimano Tourney SL-RS35 RevoShift
BRAKES	Alu. V-brake
FREEWHEEL	Shimano Tourney 6s 14-28
PEDALS	Resin MTB
HUBS	Steel, 36 holes
RIMS	Alu. 36 holes
STEM	Ahead steel
HANDLEBAR	Steel, rise 30mm
SEATPOST	Alu. 27,2mm with clamp
SADDLE	Atala Junior
TYRES	Kenda 24x1,95

HIGHLIGHT
Allo frame
Shimano R/Derailleur 18 speed
Alloy V brake
Suspended fork

BLACK/FUCSIA	
33	0115293000

JUNIOR

ALICE 6V



FRAME	Hi-Ten Tig 24"
FORK	Hi-Ten Tig 24"
HEADSET	Steel 1" threaded
CRANKSET	Steel 36T
REAR DERAILLEUR	Shimano Tourney RD-TZ50 6s
SHIFTERS LEVERS	Shimano Tourney SL-RS36 RevoShift
BRAKES	Alu. V-brake
FREEWHEEL	Shimano Tourney 6s 14-28
PEDALS	Resin
HUBS	Steel, 36 holes
RIMS	Alu. 36 holes
STEM	Quill steel
HANDLEBAR	Steel city
SEATPOST	Steel 25,4mm
SADDLE	Atala Junior
TYRES	Kenda white and black 24"X1.75

HIGHLIGHT
Shimano 6 speed F/Derailleur
Shimano revo shifter
Mudguards, chaincover, carrier
Alloy V brakes

WHITE	
36	0115292400

JUNIOR

INVADER



FRAME	Hi-Ten Tig 24"
FORK	Suspended
HEADSET	Steel 1" threaded
CRANKSET	Steel 42/34/24
REAR DERAILLEUR	Shimano Tourney RD-TZ50 6s
SHIFTERS LEVERS	Shimano Tourney SL-RS35 RevoShift
BRAKES	Alu. V-brake
FREEWHEEL	Shimano Tourney 6s 14-28
PEDALS	Resin MTB
HUBS	Steel, 36 holes
RIMS	Alu. 36 holes
STEM	Steel
HANDLEBAR	Steel, rise 30mm
SEATPOST	Steel 25,4mm
SADDLE	Atala Junior
TYRES	Kenda 24"x1,95

ORANGE	
36	0115279706
GREEN	
36	0115279703
BLACK	
36	0115279700

BUTTERFLY 18V



FRAME	Hi-Ten Tig 24"
FORK	Hi-Ten Tig 24"
HEADSET	Steel 1" threaded
CRANKSET	Steel 42/34/24
REAR DERAILLEUR	Shimano Tourney RD-TZ50 6s
SHIFTERS LEVERS	Shimano Tourney SL-RS35 Revo Shifter
BRAKES	Alu. V-brake
FREEWHEEL	Shimano Tourney 6s 14-28
PEDALS	Resin
HUBS	Steel, 36 holes
RIMS	Alu. 36 holes
STEM	Quill steel
HANDLEBAR	Steel, rise 30mm
SEATPOST	Steel 25,4mm
SADDLE	Atala Junior
TYRES	Kenda 24"X1.95

WHITE/FUCSIA	
31	0115279905
FUCSIA/WHITE	
31	0115279900

JUNIOR

TOSCANA 24” 6V



FRAME	Hi-Ten Tig 24"
FORK	Hi-Ten Tig 24"
HEADSET	Steel 1" threaded
CRANKSET	Steel 36T
REAR DERAILLEUR	Shimano Tourney RD-TY21SS 6s
SHIFTERS LEVERS	Shimano Tourney SL-RS35 RevoShift
BRAKES	Alu. V-brake
FREEWHEEL	Shimano Tourney 6s 14-28
PEDALS	Resin
HUBS	Steel, 36 holes
RIMS	Alu. 36 holes
STEM	Steel
HANDLEBAR	Steel, rise 30mm
SEATPOST	Steel, 25,4mm
SADDLE	Atala Junior
TYRES	24"x1,75

HIGHLIGHT
Allo frame
Shimano R/Derailleur 18 speed
Alloy V brake
Suspended fork

WHITE/FUCSIA	
35	0115292500

KIDS

Robuste, sicure, leggere e maneggevoli. Modelli versatili adatti per la città e per le gite fuori porta che aiutino a mantenerti in forma, che stimolino la fantasia per vivere nuove esperienze che restino scolpite nei nostri ricordi.

Safely, comfortable, light and easy to handle. Versatile models suitable for the city and for daily to keep you fit, to stimulate your imagination, to live new experiences that remain engraved in our memories.



L'azienda produttrice si riserva il diritto di cambiare immagini, colori, specifiche e prezzi senza preavviso.
The manufacturing company takes the right to change pictures, colors, specs and prices without prior notice.

TOSCANA 20” 6V



FRAME	Hi-Ten Tig 20"
FORK	Hi-Ten Tig 20"
HEADSET	Steel 1" threaded
CRANKSET	Steel, 40T
REAR DERAILLEUR	Shimano Tourney RD-TY21SS 6s
SHIFTERS LEVERS	Shimano Tourney SL-RS35 RevoShift
BRAKES	V-brake
FREEWHEEL	Shimano Tourney 6s 14-28
PEDALS	Resin
HUBS	Steel, 36 holes
RIMS	Alu. 36 holes
STEM	Steel
HANDLEBAR	Steel, rise 30mm
SEATPOST	Steel 25,4mm
SADDLE	Kid
TYRES	20"x1,75

HIGHLIGHT
Shimano 6 speed F/Derailleur
Shimano revo shifter
Tyres, saddle and grips cream
V brakes

DARK PINK	
28	0115306500

SKATE 6V BOY



FRAME	Hi-Ten Tig 20"
FORK	Suspended
HEADSET	Steel 1"1/8
CRANKSET	Steel 40T, cartridge BB
REAR DERAILLEUR	Shimano Tourney RD-TZ500 6s
SHIFTERS LEVERS	Shimano Tourney SL-RS35 RevoShift
BRAKES	Alu. V-brake with modulator
FREEWHEEL	Shimano Tourney 6s 14-28
PEDALS	Resin
HUBS	Steel, 36 holes
RIMS	Alu. 36 holes
STEM	Steel ahead
HANDLEBAR	Steel, rise 20mm
SEATPOST	Steel 25,4mm
SADDLE	Atala kid with protections
TYRES	20x1,95

HIGHLIGHT
Shimano 6 speed F/Derailleur
Alloy V brakes
Mudguards and chaincover
Carrier

ORANGE	
28	0115291501

KIDS

SKATE 6V GIRL



FRAME	Hi-Ten Tig 20"
FORK	Hi-Ten Tig 20"
HEADSET	Steel 1" threaded
CRANKSET	Steel 40T, cartridge BB
REAR DERAILLEUR	Shimano Tourney RD-TZ500 6s
SHIFTERS LEVERS	Shimano Tourney SL-RS35 RevoShift
BRAKES	Alu. V-brake with modulator
FREEWHEEL	Shimano Tourney 6s 14-28
PEDALS	Resin
HUBS	Steel, 36 holes
RIMS	Alu. 36 holes
STEM	Steel
HANDLEBAR	Steel, rise 30mm
SEATPOST	Steel 25,4mm
SADDLE	Atala kid with protections
TYRES	20x1,75 white line

HIGHLIGHT
Shimano 6 speed F/Derailleur
Alloy V brakes
Mudguards and chaincover
Carrier

WHITE/FUCSIA	
28	0115291401

SNIPER 6V



FRAME	Hi-Ten Tig 20"
FORK	Suspended 30mm
HEADSET	Steel 1" threaded
CRANKSET	Steel, 40T
REAR DERAILLEUR	Shimano Tourney RD-TY21SS 6s
SHIFTERS LEVERS	Shimano Tourney SL-RS35 RevoShift
BRAKES	Alu. V-brake
FREEWHEEL	Shimano Tourney 6s 14-28
PEDALS	Resin
HUBS	Steel, 36 holes
RIMS	Alu. 36 holes
STEM	Steel
HANDLEBAR	Steel, rise 30mm
SEATPOST	Steel 25,4mm
SADDLE	Atala kid
TYRES	Kenda 20x1,95

BLACK/YELLOW	
31	0115280000

KIDS

SNIPER 1V



FRAME	Hi-Ten Tig 20"
FORK	Suspended 30mm
HEADSET	Steel 1" threaded
CRANKSET	Steel, 40T
BRAKES	Alu. V-brake
FREEWHEEL	1s, 18T
PEDALS	Resin
HUBS	Steel, 36 holes
RIMS	Alu. 36 holes
STEM	Steel
HANDLEBAR	Steel, rise 30mm
SEATPOST	Steel 25,4mm
SADDLE	Atala kid
TYRES	Kenda 20x1,95

BLACK/GREEN	
31	0115280100

SKATE 1V GIRL



FRAME	Hi-Ten Tig 20"
FORK	Hi-Ten Tig 20"
HEADSET	Steel 1" 1/8 threaded
CRANKSET	Steel 40T, cartridge BB
BRAKES	Alu. V-brake with modulator
FREEWHEEL	1s, 16T
PEDALS	Resin
HUBS	Steel, 36 holes
RIMS	Alu. 36 holes
STEM	Steel
HANDLEBAR	Steel, rise 30mm
SEATPOST	Steel 25,4mm
SADDLE	Atala kid with protections
TYRES	20x1,75 white line

HIGHLIGHT
Alloy V brakes
Painted rims
Mudguards and chaincover
Carrier

	LILLA
28	0115295500

SPLASH 16”



FRAME	Hi-Ten Tig 16"
FORK	Hi-Ten Tig 16"
HEADSET	Steel 1" threaded
CRANKSET	Steel 36T
BRAKES	V-brake
FREEWHEEL	1s, 18T
PEDALS	Resin
HUBS	Steel, 20 holes
RIMS	Alu. 20 holes
STEM	Steel
HANDLEBAR	Steel, rise 30mm
SEATPOST	Steel 25,4mm
SADDLE	Atala kid
TYRES	16"x1,75

GREEN	
26	0155292300

TEDDY BOY



FRAME	Hi-Ten Tig 16"
FORK	Hi-Ten Tig 16"
HEADSET	Steel 1" threaded
CRANKSET	Steel 28T, cartridge BB
BRAKES	V-brake with modulator
FREEWHEEL	1s, 16T
PEDALS	Resin
HUBS	Steel, 20 holes
RIMS	Alu. 20 holes
STEM	Steel/alu.
HANDLEBAR	Steel, rise 35mm
SEATPOST	Steel 25,4mm
SADDLE	Atala kid with protections
TYRES	16x1,75

BLACK/YELLOW	
22	0115295600
GREEN/RED	
22	0115295650



TEDDY GIRL



FRAME	Hi-Ten Tig 16"
FORK	Hi-Ten Tig 16"
HEADSET	Steel 1" threaded
CRANKSET	Steel 28T, cartridge BB
BRAKES	V-brake with modulator
FREEWHEEL	1s, 16T
PEDALS	Resin
HUBS	Steel, 20 holes
RIMS	Alu. 20 holes
STEM	Steel/alu.
HANDLEBAR	Steel, rise 35mm
SEATPOST	Steel 25,4mm
SADDLE	Atala kid with protections
TYRES	16x1,75

FUCSIA	
22	0115295700
WHITE	
22	0115295750



MUFFIN BOY



FRAME	Hi-Ten Tig 14"
FORK	Hi-Ten Tig BMX 14"
HEADSET	Steel 1" threaded
CRANKSET	Steel BMX 32T
BRAKES	V-brake
FREEWHEEL	1s, 18T
PEDALS	Resin
HUBS	Steel, 20 holes
RIMS	Alu. 20 holes
STEM	Steel
HANDLEBAR	Steel, rise 30mm
SEATPOST	Steel 25,4mm
SADDLE	Atala kid
TYRES	14"x1,95

BLUE/YELLOW	
20	0115292200
RED/BLACK	
20	0115292205



MUFFIN GIRL



FRAME	Hi-Ten Tig 14"
FORK	Hi-Ten Tig BMX 14"
HEADSET	Steel 1" threaded
CRANKSET	Steel BMX 32T
BRAKES	V-brake
FREEWHEEL	1s, 18T
PEDALS	Resin
HUBS	Steel, 20 holes
RIMS	Alu. 20 holes
STEM	Steel
HANDLEBAR	Steel, rise 30mm
SEATPOST	Steel 25,4mm
SADDLE	Atala kid
TYRES	14"x1,95

WHITE	
20	0115293300

BUNNY BOY



FRAME	Hi-Ten Tig 12"
FORK	Hi-Ten Tig 12"
HEADSET	Steel 1" threaded
CRANKSET	Steel 28T, cartridge BB
BRAKES	V-brake with modulator
FREEWHEEL	1s, 16T
PEDALS	Resin
HUBS	Steel, 16 holes
RIMS	Alu. 16 holes
STEM	Steel/alu.
HANDLEBAR	Steel, rise 50mm
SEATPOST	Steel 25,4mm
SADDLE	Atala kid with protections
TYRES	12x2 1/4

GREEN/ORANGE	
19	0115295850
YELLOW/BLUE	
19	0115295800



BUNNY GIRL



FRAME	Hi-Ten Tig 12"
FORK	Hi-Ten Tig 12"
HEADSET	Steel 1" threaded
CRANKSET	Steel 28T, cartridge BB
BRAKES	V-brake with modulator
FREEWHEEL	1s, 16T
PEDALS	Resin
HUBS	Steel, 16 holes
RIMS	Alu. 16 holes
STEM	Steel/alu.
HANDLEBAR	Steel, rise 50mm
SEATPOST	Steel 25,4mm
SADDLE	Atala kid with protections
TYRES	12x2 1/4

FUCSIA	
19	0115295900
WHITE	
19	0115295950



GEOMETRIE
TABLE SIZE

A Tubo sella
Seat tube lenght

B Oirtuale orizzontale
Top tube lenght - virtual

C Drop movimento centrale
Bottom braket drop

D Altezza movimento centrale
Bottom braket height

E Lunghezza carro
Chainstay lenght

F Angolo cannotto reggisella
Seat tube angle - actual

G Angolo tubo sella
Seat tube angle - effective

H Angolo sterzo
Head tube angle

I Offset forcella
Fork offset

J Distanza perni ruota
Wheelbase

K Lunghezza tubo sterzo
Head tube lenght

L Reach
Reacht

M Stack
Stack

O Avancorsa
Stack

P Lunghezza forcella
Fork length

Q Quota di standover
Standover height

X Lunghezza attacco manubrio
Stem lenght

Y Larghezza piega manubrio
Handlebar width

Z Escursione posteriore
Rear travel

T Lunghezza reggisella
Seat post length

U Statura consigliata
Advised height

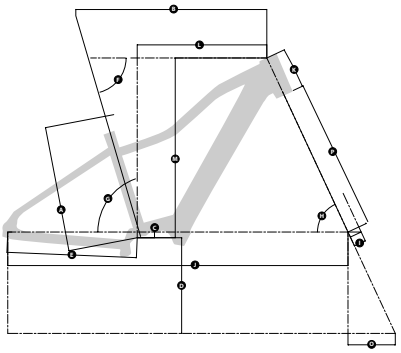

B-CROSS CORWEN - E-BLADE

		M	L
A	mm	460	500
B	mm	590	600
C	mm	62	62
D	mm	340	340
E	mm	500	500
F	deg	72.5	72.5
G	deg	68.5	68.5
H	deg	68.5	68.5
I	mm	46	46
J	mm	1170	1180
K	mm	140	130
L	mm	450	465
M	mm	665	680
P	mm	530	530
Q	mm	730	735.2
Z	mm	170	175
T	mm	350	350
U	mm	1.70-1.85	1.85-2.00

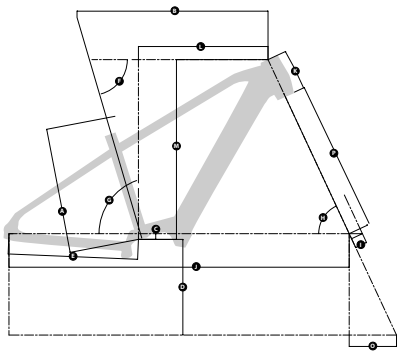

B-CROSS A 4.4

		S (LADY)	M (LADY)	L (MAN)
A	mm	400	460	500
B	mm	590	590	600
C	mm	62	62	62
D	mm	340	340	340
E	mm	500	500	500
F	deg	72.5	72.5	72.5
G	deg	68.5	68.5	68.5
H	deg	68.5	68.5	68.5
I	mm	46	46	46
J	mm	1170	1170	1180
K	mm	150	140	130
L	mm	440	450	465
M	mm	640	665	680
P	mm	530	530	530
Q	mm	725	730	735.2
Z	mm	170	170	175
T	mm	350	350	350
U	mm	1.55-1.70	1.70-1.85	1.85-2.00

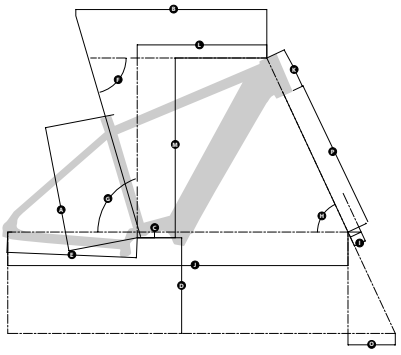

B-CROSS POWERPACK

		S	M	L
A	mm	400	460	500
B	mm	590	605	620
C	mm	50	50	50
D	mm	305	305	305
E	mm	480	480	480
F	deg	74	74	74
G	deg	76	76	76
H	deg	68	68	68
I	mm	46	46	46
J	mm	1175	1190	1205
K	mm	165	165	165
L	mm	399	414	429
M	mm	666	666	666
P	mm	515	515	515
Q	mm	714	765	797
Z	mm	170	170	175
T	mm	350	350	350
U	mm	1.50- 1.70	1.70-1.85	1.85-2.00

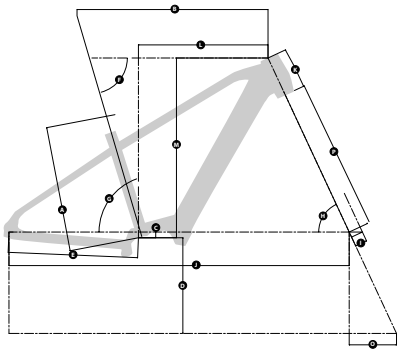

B-CROSS AM80

		S	M	L
A	mm	420	460	500
B	mm	600	615	630
C	mm	50	50	50
D	mm	320	320	320
E	mm	500	500	500
F	deg	73	73	73
G	deg	73	73	73
H	deg	69	69	69
I	mm	46	46	46
J	mm	1146	1161	1180
K	mm	165	165	165
L	mm	382	384	389
M	mm	676	653	619
P	mm	515	515	515
Q	mm	690	720	735
Z	mm	170	170	175
T	mm	350	350	350
U	mm	1.50-1.70	1.70-1.85	1.85-2.00

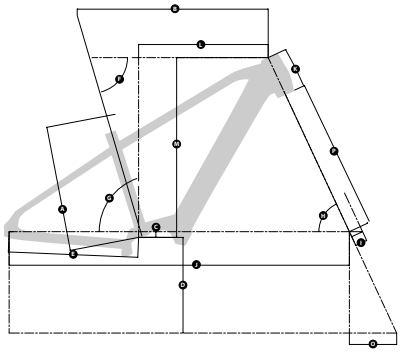

Y-CROSS				
		S	M	L
A	mm	400	460	500
B	mm	590	590	600
C	mm	62	62	62
D	mm	308	308	308
E	mm	455	455	455
F	deg	73	73	73
G	deg	73	73	73
H	deg	68.5	68.5	68.5
I	mm	46	46	46
J	mm	1124	1124.2	1133.8
K	mm	140	140	140
L	mm	387	387	397
M	mm	662	662	662
P	mm	520	520	520
Q	mm	725	776	806
Z	mm	170	170	175
T	mm	350	350	350
U	mm	1.50-1.70	1.70-1.85	1.85-2.00

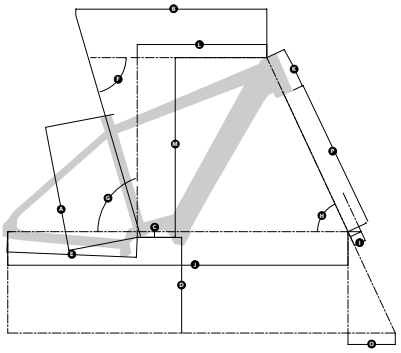

B-TOUR POWERTUBE							
		S (LADY)	M (LADY)	L (LADY)	M (MAN)	L (MAN)	XL (MAN)
A	mm	450	500	530	500	530	590
B	mm	620	620	620	620	620	620
C	mm	60	60	60	60	60	60
D	mm	319	319	319	319	319	319
E	mm	510	510	510	510	510	510
G	deg	72	72	72	72	72	72
H	deg	70	70	70	70	70	70
I	mm	44	44	44	44	44	44
J	mm	1177	1177	1177	1177	1177	1177
K	mm	175	175	175	175	175	175
P	mm	477	477	477	477	477	477
Q	mm	720	720	720	815	840	877
Z	mm	170	170	175	170	170	175
T	mm	350	350	350	350	350	350
U	mm	1.60 – 1.70	1.70 – 1.80	1.80 – 1.90	1.60 – 1.75	1.75 – 1.90	1.90 – 2.05

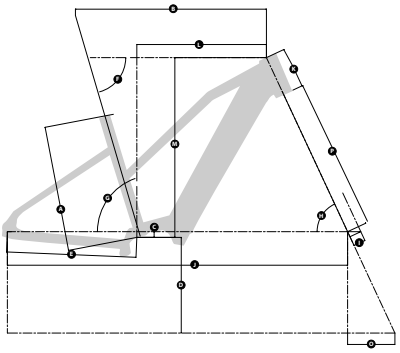

B-TOUR POWERPACK							
		S (LADY)	M (LADY)	L (LADY)	M (MAN)	L (MAN)	XL (MAN)
A	mm	450	500	530	500	530	590
B	mm	620	620	620	620	620	620
C	mm	60	60	60	60	60	60
D	mm	319	319	319	319	319	319
E	mm	510	510	510	510	510	510
G	deg	72	72	72	72	72	72
H	deg	70	70	70	70	70	70
I	mm	44	44	44	44	44	44
J	mm	1177	1177	1177	1177	1177	1177
K	mm	175	175	175	175	175	175
P	mm	477	477	477	477	477	477
Q	mm	692	692	692	815	840	877
Z	mm	170	170	175	170	170	175
T	mm	350	350	350	350	350	350
U	mm	1.60 – 1.70	1.70 – 1.80	1.80 – 1.90	1.60 – 1.75	1.76 – 1.90	1.90 – 2.05

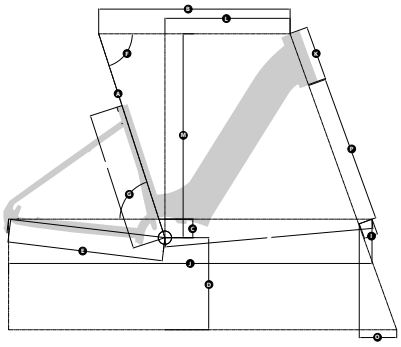

B-EASY POWERPACK			
		S/M	M/L
A	mm	450	500
B	mm	620	620
C	mm	60	60
D	mm	319	319
E	mm	510	510
G	deg	72	72
H	deg	70	70
I	mm	44	44
J	mm	1177	1177
K	mm	175	175
P	mm	477	477
Q	mm	460	460
Z	mm	170	170
T	mm	350	350
U	mm	1.55 – 1.70	1.70 – 1.85

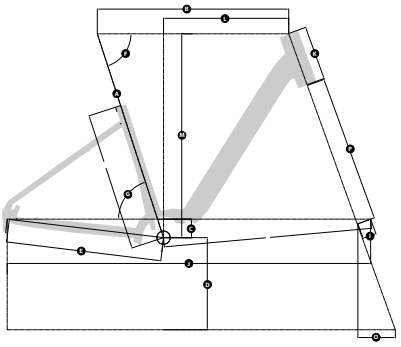

B-EASY A6.4 / 5.4		
		S/M
A	mm	470
B	mm	590
C	mm	60
D	mm	319
E	mm	510
G	deg	72
H	deg	69
I	mm	44
J	mm	1159
K	mm	175
P	mm	477
Q	mm	429
Z	mm	170
T	mm	350
U	mm	1.60 - 1.75

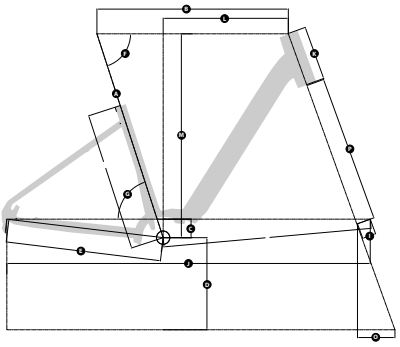

B-EASY RENT		
		S/M
A	mm	490
B	mm	590
C	mm	60
D	mm	319
E	mm	510
G	deg	72
H	deg	69
I	mm	44
J	mm	1159
K	mm	175
P	mm	477
Q	mm	429
Z	mm	170
T	mm	350
U	mm	1.60 - 1.75

GEOMETRIE

TABLE SIZE

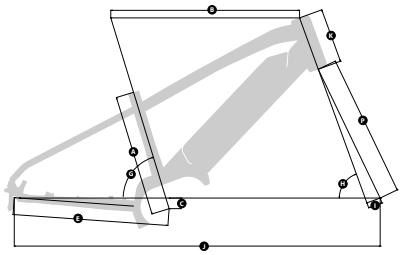

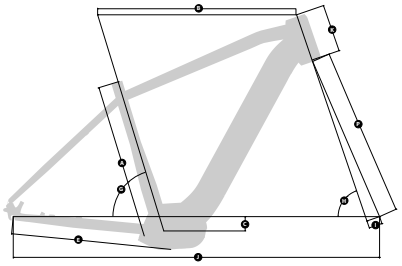

A Tubo sella
Seat tube lenght

B Virtuale orizzontale
Top tube lenght - virtual

C Drop movimento centrale
Bottom braket drop

E Lunghezza carro
Chainstay lenght

G Angolo tubo sella
Seat tube angle - effective

H Angolo sterzo
Head tube angle

J Distanza perni ruota
Wheelbase

I Rack forcella
Fork rack

M Stack
Stack

O Avancorsa
Stack

P Lunghezza forcella
Fork length

K Lunghezza tubo sterzo
Head tube length

Z Lunghezza pedivelle
Crank length

X Lunghezza attacco manubrio
Handlebar stem length

DOODLE		
		35CM
A	mm	345
B	mm	535
C	mm	-30
E	mm	440
G	deg	73
H	mm	70
P	deg	405
I	deg	40
J	mm	1037
K	mm	165
Z	mm	152
X	mm	60

CLEVER XC		
		MAN 49CM
A	mm	490
B	mm	625
C	mm	-45
E	mm	475
G	deg	73
H	mm	71
P	deg	528
I	deg	46
J	mm	1157
K	mm	150
Z	mm	170
X	mm	90

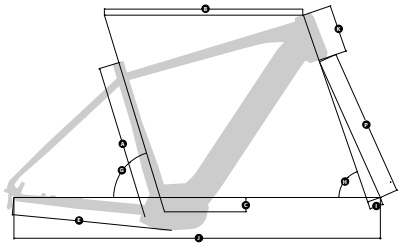

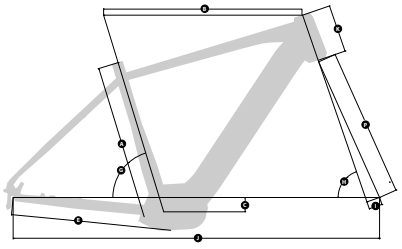

CLEVER			
		MAN 49CM	LADY 45CM
A	mm	490	450
B	mm	625	615
C	mm	-45	-45
E	mm	465	465
G	deg	73	73
H	mm	71	71
P	deg	467	467
I	deg	42	42
J	mm	1140	1130
K	mm	150	150
Z	mm	170	170
X	mm	90	90

DISTRICT		
		MAN 49CM
A	mm	490
B	mm	610
C	mm	-45
E	mm	500
G	deg	73
H	mm	70
P	deg	467
I	deg	42
J	mm	1172
K	mm	150
Z	mm	170
X	mm	105

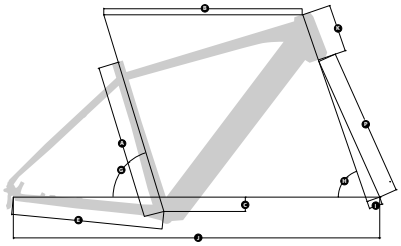

E-SPIKE			
		MAN 49CM	LADY 45CM
A	mm	490	450
B	mm	600	585
C	mm	-45	-45
E	mm	455	455
G	deg	73	73
H	mm	71	71
P	deg	467	467
I	deg	42	42
J	mm	1105	1090
K	mm	150	150
Z	mm	170	170
X	mm	90	90

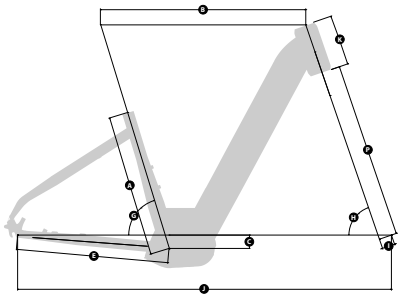

CULT XC		
		43CM
A	mm	430
B	mm	615
C	mm	-45
E	mm	475
G	deg	73
H	mm	71
P	deg	528
I	deg	46
J	mm	1147
K	mm	150
Z	mm	170
X	mm	90

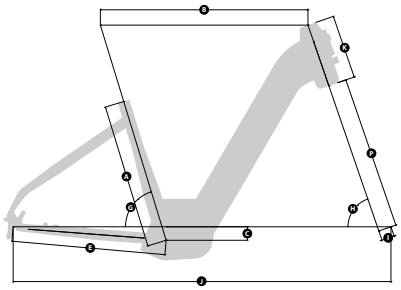

CULT 700C		
		43CM
A	mm	430
B	mm	615
C	mm	-45
E	mm	475
G	deg	73
H	mm	71
P	deg	467
I	deg	42
J	mm	1142
K	mm	190
Z	mm	170
X	mm	90

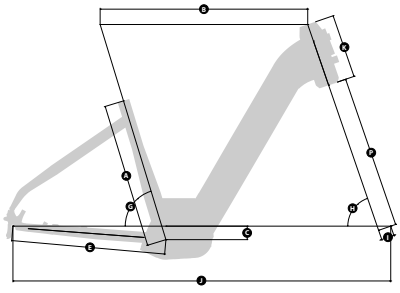

CULT 26”		
		43CM
A	mm	430
B	mm	615
C	mm	-40
E	mm	455
G	deg	73
H	mm	71
P	deg	450
I	deg	38
J	mm	1119
K	mm	190
Z	mm	170
X	mm	90

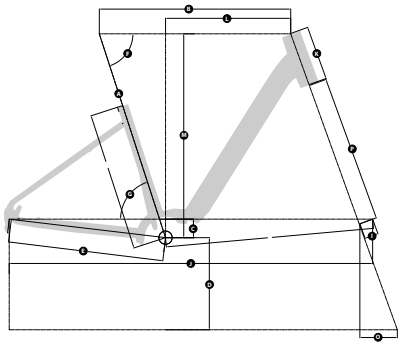

DESIRE 26”		
		45CM
A	mm	450
B	mm	595
C	mm	-35
E	mm	475
G	deg	73
H	mm	70
P	deg	440
I	deg	40
J	mm	1133
K	mm	170
Z	mm	170
X	mm	105

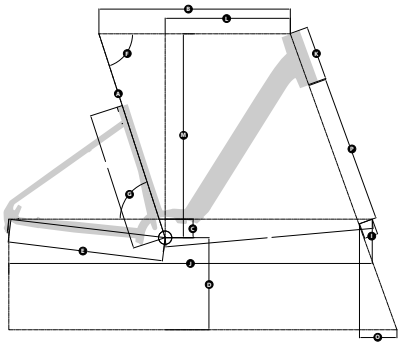

DEAL 26”		
		45CM
A	mm	450
B	mm	585
C	mm	-35
E	mm	480
G	deg	73
H	mm	70
P	deg	440
I	deg	42
J	mm	1129
K	mm	150
Z	mm	170
X	mm	105

A Tubo sella
Seat tube lenght

B Virtuale orizzontale
Top tube lenght - virtual

C Drop movimento centrale
Bottom braket drop

E Lunghezza carro
Chainstay lenght

G Angolo tubo sella
Seat tube angle - effective

H Angolo sterzo
Head tube angle

J Distanza perni ruota
Wheelbase

I Rack forcella
Fork rack

M Stack
Stack

O Avancorsa
Stack

P Lunghezza forcella
Fork length

K Lunghezza tubo sterzo
Head tube length

Z Lunghezza pedivelle
Crank length

X Lunghezza attacco manubrio
Handlebar stem length

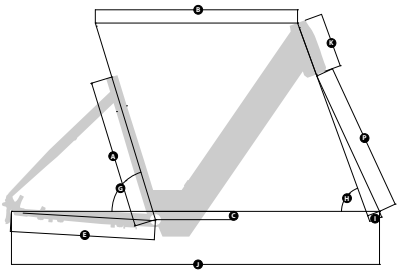

T-SPACE		
		43CM
A	mm	430
B	mm	590
C	mm	-45
E	mm	465
G	deg	73
H	mm	71
P	deg	467
I	deg	42
J	mm	1107
K	mm	190
Z	mm	170
X	mm	90

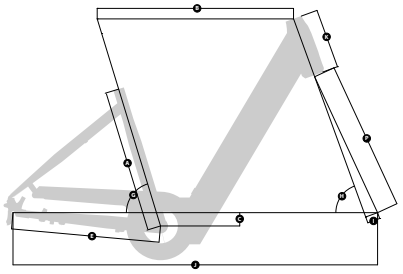

E-SPACE 700c		
		45CM
A	mm	450
B	mm	585
C	mm	-45
E	mm	455
G	deg	73
H	mm	71
P	deg	467
I	deg	42
J	mm	1092
K	mm	165
Z	mm	170
X	mm	90

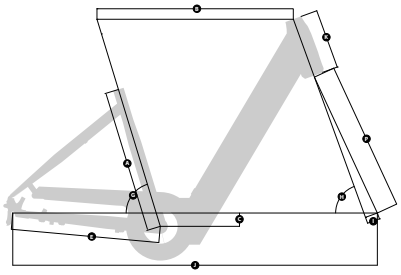

E-SPACE 26"		
		43CM
A	mm	430
B	mm	590
C	mm	-40
E	mm	445
G	deg	73
H	mm	70
P	deg	450
I	deg	38
J	mm	1095
K	mm	180
Z	mm	170
X	mm	90

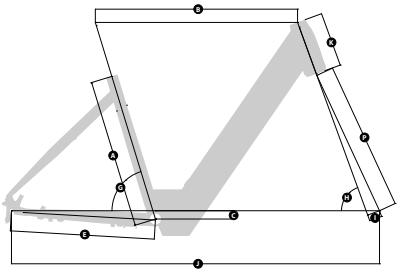

TASER 24"x2,40"		
		45CM
A	mm	450
B	mm	610
C	mm	-25
E	mm	435
G	deg	73
H	mm	70
P	deg	450
I	deg	38
J	mm	1110
K	mm	165
Z	mm	170
X	mm	90

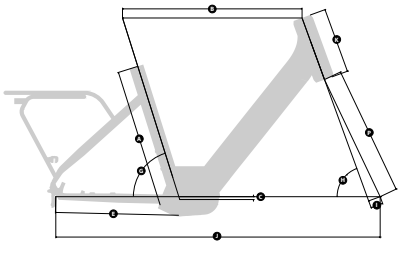

CALIFFONE		
		49CM
A	mm	490
B	mm	630
C	mm	-10
E	mm	435
G	deg	72,5
H	mm	70
P	deg	455
I	deg	43
J	mm	1138
K	mm	230
Z	mm	155
X	mm	90

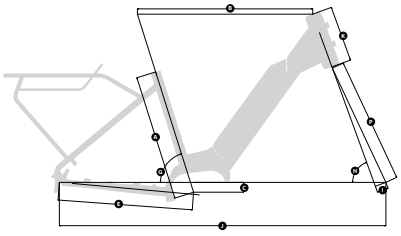

DOMINO		
		45CM
A	mm	450
B	mm	625
C	mm	-35
E	mm	480
G	deg	72,5
H	mm	70
P	deg	450
I	deg	40
J	mm	1165
K	mm	200
Z	mm	170
X	mm	90

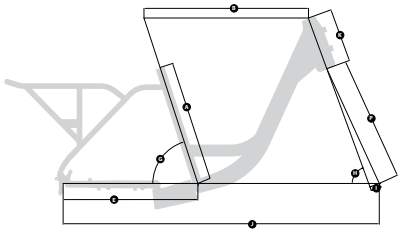

E-ROCK		
		43CM
A	mm	430
B	mm	580
C	mm	0
E	mm	475
G	deg	72
H	mm	70
P	deg	440
I	deg	35
J	mm	1115
K	mm	190
Z	mm	152
X	mm	53

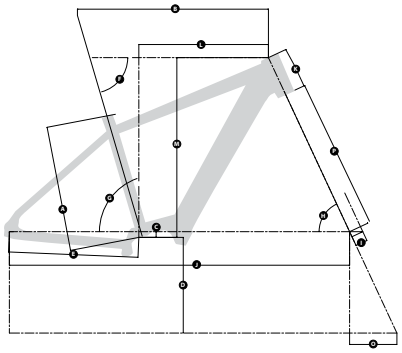

CLUB		
		33CM
A	mm	335
B	mm	605
C	mm	30
E	mm	420
G	deg	77,2
H	mm	73
P	deg	330
I	deg	40
J	mm	1097
K	mm	130
Z	mm	152

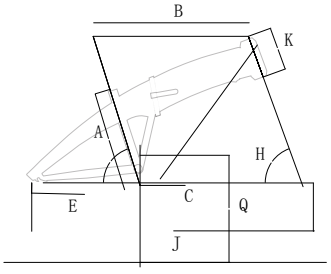

EXTRAFOLDING 7		
		44CM
A	mm	445
B	mm	630
C	mm	43,5
E	mm	440
G	deg	72
H	mm	69,5
P	deg	465
I	deg	30
J	mm	1122
K	mm	160
Z	mm	170

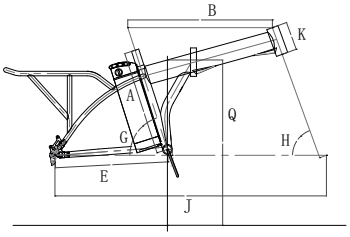

EXTRAFOLDING		
		43CM
A	mm	430
B	mm	610
C	mm	25
E	mm	475
G	deg	71,5
H	mm	70
P	deg	465
I	deg	30
J	mm	1145
K	mm	120
Z	mm	170

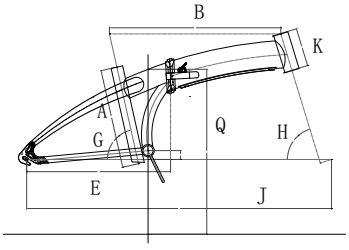

E-FOLDING		
		33CM
A	mm	335
B	mm	600
C	mm	30
E	mm	412
G	deg	77,2
H	mm	73
P	deg	330
I	deg	40
J	mm	1032
K	mm	130
Z	mm	152

GEOMETRIE

TABLE SIZE

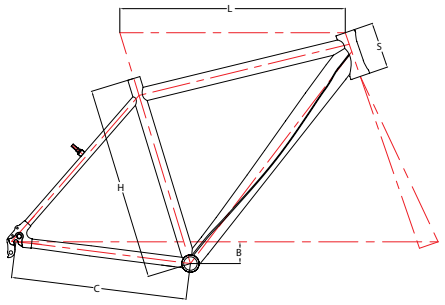

SLR

TAGLIA / SIZE	H	L	B	S	C	STATURA / HEIGHT
S	475	530	68	110	405	1.60 – 1.70
M	510	545	68	125	405	1.70 – 1.80
L	540	560	68	145	405	1.80 – 1.90

TIME OUT - NORTH BLACK

TAGLIA / SIZE	H	L	B	S	C	STATURA / HEIGHT
Lady	440	560	45	125	445	
M	490	570	45	125	445	1.60 – 1.75
L	540	580	45	125	445	1.75 – 1.90

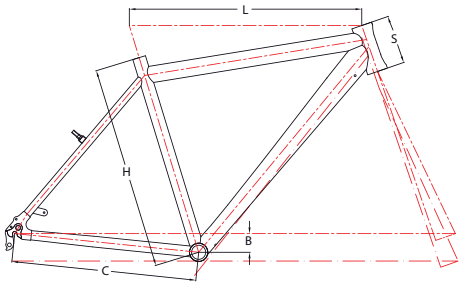

DISCOVERY 24S

TAGLIA / SIZE	H	L	B	S	C	STATURA / HEIGHT
Lady	440	560	45	145	445	> 1.60
M	490	570	45	145	445	1.60 – 1.75
L	540	580	45	145	445	1.75 – 1.90

DISCOVERY 21S - 18S

TAGLIA / SIZE	H	L	B	S	C	STATURA / HEIGHT
Lady S	440	547	45	165	445	> 1.60
Lady M	490	560	45	165	445	1.60 – 1.75
M	490	560	45	150	445	1.60 – 1.75
L	540	575	45	150	445	1.75 – 1.90
XL	590	590	45	180	445	1.90 – 2.05

BOSTON

TAGLIA / SIZE	H	L	B	S	C	STATURA / HEIGHT
Lady S	440	572	56	145	445	> 1.60
M	490	572	56	145	445	1.60 – 1.75
L	540	576	56	145	445	1.75 – 1.90

PLEASURE

H	L	B	S	C
440	590	45	150	445

LIFE

H	L	B	S	C
420	580	43	140	455

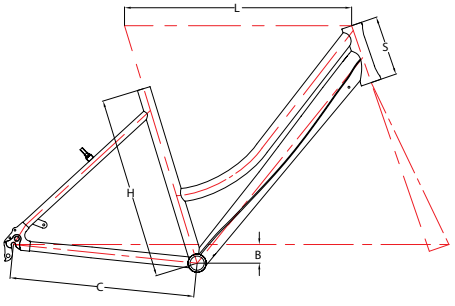

GRIFONE

H	L	B	S	C
420	585	40	150	435

MAGGIE

H	L	B	S	C
420	557	40	160	420

CITTÀ 26”

H	L	B	S	C
430	545	30	200	440

TOSCANA 28”

H	L	B	S	C
483	560	62	160	450

SNAP 29"

TAGLIA / SIZE	H	L	B	S	C	STATURA / HEIGHT
S (17")	430	595	55	120	450	1.60 – 1.73
M (19")	480	610	55	120	450	1.73 – 1.88
L (21")	530	630	55	120	450	1.88 – 2.05

RACE PRO 27,5”

H	L	B	S	C
355	543	25	110	420

WAP - REPLAY - STARFIGHTER

TAGLIA / SIZE	H	L	B	S	C	STATURA / HEIGHT
S (16")	410	560	48	110	435	1.55 – 1.70
M (18")	460	582	48	120	435	1.70 – 1.85
L (20")	510	604	48	130	435	1.85 – 2.00

BLISTER

H	L	B	S	C
M (18")	460	600	45	120	450

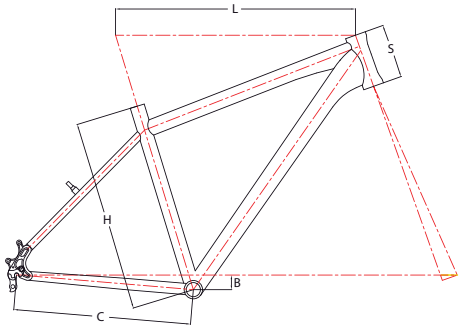

STATION

TAGLIA / SIZE	H	L	B	S	C	STATURA / HEIGHT
S (15")	380	570	45	120	435	1.50 – 1.70
M (18")	460	585	45	120	435	1.70 – 1.85
L (20")	510	605	45	120	435	1.85 – 2.00

MYFLOWER

H	L	B	S	C
430	570	48	120	435

SUNRISE

H	L	B	S	C
430	545	35	120	430

RACE COMP 26”

H	L	B	S	C
355	544	25	110	420

PANTHER

H	L	B	S	C
356	521	8	110	450
432	540	8	120	450

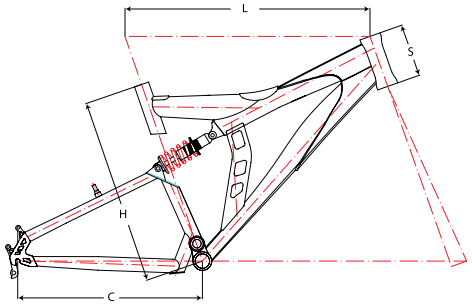

SERVICE

Gentile Rivenditore,
per essere in grado di consentire una rapida e veloce elaborazione delle domande e dei reclami e di offrire il miglior servizio possibile, è essenziale prendere conoscenza di tutte le informazioni necessarie riportate qui in forma sintetica.

Nelle pagine seguenti trova tutte le informazioni importanti riguardo la garanzia, le norme ed il trattamento dei reclami (ad esempio i danni da trasporto).

Ulteriori informazioni più specifiche sui nostri prodotti si trovano nel nostro manuale di base Atala / Whistle allegato a ciascuna delle nostre biciclette.

Dear specialist dealer,
to being able to grant a smooth and quick processing of your enquires and complaints and to offer you the best service possible it is essential that we receive all necessary information promptly and in compressed form.

On the following pages we woud like to provide all important information amongst others about warranty, rules and complaint processing (e.g. damage in transport).

Furthermore specific information about our products and these topics you can find in our Atala/Whistle basic manual, which is enclosed to each of our bicycles.

I PRATICA DI ASSISTENZA

Per garantire una rapida elaborazione, la pratica di assistenza in forma scritta e con tutti i documenti necessari, deve essere inserita nel nostro sistema assistenza.atala.it.

Di seguito informazioni importanti riguardanti i reclami relativi ai danni al trasporto e alla consegna non completa:
Le merci consegnate devono essere controllate per verificare la presenza di tutti i componenti e i danni esterni al momento del ricevimento.
Eventuali danni devono essere confermati dall'autista sul documento di trasporto in maniera estesa. Non è valida una "riserva di controllo", ma va riportata la causa esatta della riserva stessa (ad esempio "Riserva per collo aperto", "Riserva per collo schiacciato").
Eventuali danni e mancanza di componenti quali manuali, documentazioni del veicolo e/o componenti o accessori, devono essere comunicati in forma scritta entro otto giorni lavorativi dal ricevimento della merce.

INFORMAZIONI IMPORTANTI SUI RECLAMI DA PARTE DEI CONSUMATORI FINALI PRESSO RIVENDITORE SPECIALIZZATO

Con riferimento al prodotto oggetto della segnalazione, il consumatore deve rivolgersi al rivenditore con i seguenti documenti:
prova di vendita e data di consegna, quale prova di acquisto come fattura, scontrino o bolla di consegna del veicolo.
Una segnalazione valida da parte del consumatore, può essere effettuata solo tramite il rivenditore presso il quale è stato acquistato il prodotto e con il quale è stato concluso il contratto di vendita.
Se il proprietario della bicicletta si reca da un altro rivenditore rispetto a dove è stato acquistato per eseguire una segnalazione, Atala non dovrà sostenere eventuali costi derivanti, che devono essere pagati dal consumatore.
Atala si riserva il diritto di addebitare i costi di trattamento per reclami non giustificati.

INFORMAZIONI IMPORTANTI SUL RITIRO DI BICICLETTE

Richiedere il ritiro di un pezzo, di un accessorio o di una bicicletta difettosa tramite il portale dedicato all'assistenza.
Atala accetta solamente la consegna di biciclette che sono state ritirate secondo la procedura. Verranno respinte tutte le scatole restituite senza l'ordine di ritiro. Per il ritiro ingiustificato di biciclette, Atala si riserva il diritto di addebitare il trasporto, nonché una tassa di gestione.
I pedali devono essere smontati, il manubrio deve essere girato lateralmente e gli oggetti personali devono essere già stati rimossi dalla bicicletta da parte del rivenditore. Se ciò non dovesse avvenire, queste parti possono essere re-imballate in una scatola per la riconsegna. Atala non sarà responsabile in caso di perdita di alcuno di questi accessori.
Le batterie devono essere inserite nella rispettiva sede e devono essere spediti anche il caricatore, il display e le chiavi.
Deve essere inclusa una copia della fattura del consumatore e un modulo di non conformità completamente compilati.
Le biciclette ritirate devono essere pulite e trasportabili che significa imballate in custodia protettiva, inclusi manubrio e sella per evitare danni al trasporto. Lo spedizioniere non accetterà le biciclette non imballate. Se non è in grado di imballare la stessa come indicato, contatti il nostro team di assistenza.
Al momento del ritiro del veicolo, riceverà una copia firmata del documento di trasporto dal vettore.

Non accettiamo le seguenti ragioni per il ritiro:
- ordine non corretto
- regolazione del cambio o del freno
- centraggio della ruota

I COMPLAINT PROCESSING

To grant a quick processing the complaint, in written form with all necessary documents, has to be registered in our system.

Important information regarding complaints concerning transport damages and non-complete delivery:
The delivered goods have to be checked for completeness and external damage uponreceipt. Possible damages have to be confirmed by the driver on the consignment note in an extended way. Writing "Subject to check" is not valid, but you should write the real cause (for example, "Subject to check because box is open" or "Subject to check because box is crushed").
Hidden damage and non-completeness by missing manuals, vehicle documen and/or missing mounting parts or accessories have to be communicated in written form after eight working days at the latest.

IMPORTANT INFORMATION ON COMPLETE COMPLAINTS BY END CONSUMERS AT THE SPECIALIST DEALER

Besided the product concerned by the complaint, the consumer has to approach the dealer with the following documents:
Proof of sale, date of delivery which is a proof of purchase like invoice or receipt of the vehicle or part.
A valid complaint by the consumer can only be made at the dealer at which he bought the product that is the dealer with whom the sales contract was concluded.
If the vehicle owner instructs an other dealer than the dealer where the vehicle was bought with the complaint, Atala will not bear any possibly arising costs – these have to be paid by the customer himself.
Atala reserves the right to charge an additional processing fee for not justified complaints.

IMPORTANT INFORMATION ON BICYCLE COLLECTION

Arrange pick-up of a defective bicycle mouting part or accessory via our technical support system.
We can only accept delivery of bicycles which have been picked-up on our account.
We have to decline acceptance of any bicycles which are returned to us wihtout pick-up order.
For not justified bicycle collection we reserve the right to charge you the freight costs for transport and possible re-shipment as well as a handling fee.
Pedals must be demounted, the handlebar must be turned sideways and personal items should have already been removed from the bicycle by the dealer. If this should not happens, these parts may only be packed in the box loosely for reshipment. We will not be liable for any loss.
Batteries have to be put in the respective socket including charger, display and key(s) A copy of the consumer invoice and a completely filled compliant form has to be included.
Bikes retrieved by us have to be cleaned and in transportable state which means packed in slipcase, handlebar and saddle protection to prevent transport damage.
The forwarder will not accept unpacked bicycles. If you are not able to pack the bicycle as mentioned, please contact our service team.
Upon pick-up of the vehicle you will receive a signed copy of the cinsignment note from the carrier.

We do not accept the following reasons for a bike retrieval:
- incorrect order
- adjustment work at gear or brake
- wheel re-centering

GARANZIA

I prodotti Atala sono garantiti dal venditore secondo quanto previsto dalle attuali norme di legge vigenti in materia. Non sono coperte da garanzia Atala tutte le parti meccaniche ed i componenti per i quali vale la garanzia del fabbricante.

L'azienda si riserva il diritto di modificare le immagini ed i componenti in ogni momento e senza alcun preavviso.

WARRANTY

Atala's products are guaranteed by the dealer in accordance with the current Italian laws in force. All the other mechanical parts or components are not included in this warranty but are under the manufacturer's warranty.

The company reserves the right to modify pictures and the bicycle parts at any time without prior notice.

Prezzo di listino consigliato al pubblico, iva inclusa. Prezzi soggetti a modifiche da parte di Atala S.p.A.

The price included VAT and may be modified by Atala S.p.A.

Il peso della bici potrebbe variare in base alla taglia di circa il 5%.

The weight of the bike may vary according to the size by approximately 5%.

I DIFETTI DI MATERIALE

DIRITTI DEI COMPRATORI

Secondo le leggi di garanzia europee, aggiornate il 1° gennaio 2002, il rivenditore è responsabile per i difetti dei materiali per un periodo di due anni. Questo periodo inizia con la consegna del prodotto dal rivenditore al cliente. All'interno del periodo obbligatorio della durata di 2 anni, è da considerare anche il periodo di inversione dell'onere della prova fissato in 6 mesi oltre la data di consegna del prodotto. Ciò significa che il legislatore ha stabilito che qualsiasi difetto che si verifichi entro 6 mesi dalla consegna del prodotto era pre-esistente al momento della consegna stessa. Pertanto, in tal caso, qualora si verifichi un difetto, il venditore deve dimostrare che questo era inesistente al momento della consegna o è stato causato da uso improprio o usura correlata all'utilizzo. Passato questo periodo è il compratore a dover fornire questa prova.

LA RESPONSABILITÀ PER I MATERIALI NON COPRE:

Difetti causati da uso improprio o forza maggiore.
Qualsiasi parte del veicolo soggetto a usura e usura a causa dell'utilizzo, purché non vi siano difetti di produzione o difetti nel materiale. Difetti causati da uso improprio, manutenzione insufficiente e riparazioni, conversioni o sostituzioni delle parti del veicolo eseguita da personale non qualificato. Ciò include, ad esempio, la manipolazione del motore di una eBike. Difetti causati dalla mancata osservanza di una sostituzione potenzialmente necessaria dei componenti relativi alla sicurezza, come manubri, freni etc.
Difetti dovuti ad incidenti o ad altre influenze esterne, a condizione che non siano causate da componenti difettose o guasti del prodotto.
Riparazioni effettuate con componenti usati o guasti derivanti da tali riparazioni
Difetti dovuti all'uso durante una competizione, a meno che non vi sia una esplicita autorizzazione. Componenti montati successivamente che non rientrano nell'ambito della consegna al momento della vendita o errori derivanti dall'assemblaggio non professionale di tali parti.
Danni causati dal mancato rispetto del peso massimo consentito del veicolo o dall'utilizzo non conforme alle restrizioni all'uso (sedili per bambini, ecc.)
Veicoli di seconda mano in cui è già avvenuto un cambiamento di proprietà.

I MATERIAL DEFECTS

BUYER'S RIGHTS

According to the European Warranty laws, adjusted on January 1st 2002, the retailer is liable for material defects for a period of 2 years. This period starts with the delivery of the product from the retailer to the customer.
Besided the fundamental 2 year period, there is also the legal so-called reversal of the burden of proof 6 months past the date of the product's delivery. This means that the legislator set a fiction that any defect that occurs within 6 months of delivery of the product was pre-existent at the time of delivery. Therefore in this case if a defect occurs the seller has to prove that the defect was non-existent at the time of delivery or was caused by improper use or function-related wear. Past that period the buyer has to proof the reverse.

THE LIABILITY FOR MATERIAL DEFECTS DOES NOT COVER:

Defects that were caused by improper use or force majeure
Any parts of the vehicle that are subject to function-related wear and tear, as long as there are no manufacturing defects or faults in material
Defects that were caused by improper or insufficient case and unprofessionally performed repairs, conversions or replacement of vehicle parts. This includes, the manipulation of the drive system of an eBike.
Defects that were caused by disregard of a potentially necessary replacement of safety related components, like handlebars, brakes and so on.
Defects due to accidents or other usual external influences as long as they are not caused by faulty information or product failures. Repairs, that use second-hand components or faults resulting from such repairs.
Defects due to competitive use of a product that has no explicit competition clearance.
Retrofitted parts, that are not part of the scope of delivery at the time of the product transfer of faults resulting from the unprofessional assembly of such parts.
Damages caused by not observing the maximum permissible weight of the vehicle or not complying with the restrictions on use (child seat, etc).
Second-hand vehicles where a change of ownership has already taken place.

CONSEGNA DELLE PARTI DI RICAMBIO IN ANTICIPO

Si prega di notare i seguenti punti quando si richiede la consegna anticipata di un pezzo di ricambio prima di presentare un modulo di non conformità adeguato:
- I ritiri necessari saranno organizzati da Atala.
- Tutti i componenti di valore significativo che saranno anticipati, lo saranno in "conto anticipo": se su richiesta di Atala il componente difettoso non sarà restituito nel mese, il conto anticipo genererà una fattura di vendita del componente stesso.
- Le segnalazioni ingiustificate verranno restituite al rivenditore a proprie spese – Atala si riserva una commissione di gestione.
- Per le segnalazioni di difettosità di parti di veicoli o accessori dei marchi nella tabella sottostante, questi devono essere restituiti direttamente al produttore o al distributore con relativa ricevuta.

SPARE PART DELIVERY IN ADVANCE

Please note, before submitting a compliant, the following points when applying for a spare art delivery:
- Necessary pick-ups will be arranged by us.
- All parts with a significant value that are sent in advance, will be sent in "advance replacement" form: if under Atala request, the defective component will not be sent back within one month, an invoice for the component will be automatically generated.
- Not justified complaintes will be returned to the dealer at his own cost we reserve a processing fee.
- For complaints of vehicle parts or accessories by the below mentioned brands, these have to be returned directly to the manufacturer or distributor with receipt.

MARCHIO BRAND	PRODUTTORE O DISTRIBUTORE/ MANUFACTURER OR DISTRIBUTOR	INDIRIZZO ADDRESS	TELEFONO PHONE	E-MAIL WEB
Bosch	*Magura GmbH*		*+39 0299953659*	*service@bosch-ebike.it*
Sram / Rock Shox	*Beltrami TSA srl*	*via Euripide 7 Reggio Emilia*	*+39 0522300523*	*info@beltramitsa.it*
Fox	*Vittoria S.p.A.*	*Via Papa Giovanni XXIII 1 Madone (BG)*	*+39 0354993911*	*service.vittoria.com*
FSA	*F.S.A. s.r.l.*	*Via del Lavoro 56 Busnago (MB)*	*+39 0396885265*	
Shimano	*Shimano Italy Bicycle Components*	*Strada Statale del Sempione, 197 Pero (MI)*	*+39 0238592097*	*assistenza@shimano-eu.com*
Schwalbe	*Schwalbe Italia s.r.l.*	*Via Giuseppe Verdi 3 Agrate Brianza (MB)*	*+39 0396058078*	*info@schwalbe.it*
Ananda	*Marcon Italy Service Station*	*Via D.G Zanchette 6 Cassola (VI)*	*+39 3457959644*	*ext.marcon@ananda-service.com*
SR Suntour	*Antonio Rullo*	*Via Manzoni 368 2Cassina Rizzardi (CO)*	*+39 031934573*	*info@assistenzarullo.com*
RST	*GB center*		*+39 0423040109*	*assistenza@gb-center.it*
OLI	*OLI*	*Via delle Pesche, 821 Cesena (FC) Italy*	*+39 3240112421*	*customerservice@oli-ebike.com*
Mavic	*GB center*		*+39 3346582496*	*techservice.it@mavic.com*

La richiesta di gestire attraverso Atala la pratica comporterà l'addebito dei costi al rivenditore e un significativo prolungamento dei tempi di soluzione della stessa a causa di un doppio passaggio. In questo caso inoltre, la decisione per la soluzione pratica rimane di completa pertinenza del produttore a cui è indirizzata.

bikedesign.it

Atala

2025

ATALA S.P.A.

Via della Guerrina, 108
20900 Monza (MB)
Tel. +39 039 2045311

www.atala.it



8 000000 351159